Town of Uxbridge

Draft – Alternatives Screening Analysis Report

Comprehensive Wastewater Management Planning (CWMP) Project

December 2014

Executive Summary

ES.1 Project Background

The purpose of the Comprehensive Wastewater Management Planning (CWMP) Project is to provide an environmentally and economically sound plan for wastewater treatment and nutrient management in the Town of Uxbridge (Town) for the planning period 2015-2035, with a vision for the Town's build-out projections. The CWMP Project will assess the wastewater and nutrient-related needs in the Town; evaluate appropriate mitigation measures for those needs and develop a recommended plan for improved management systems.

This Alternatives Screening Analysis Report documents the second of three major phases of the CWMP. The first phase was the needs assessment, which was documented in the October 2014 Needs Assessment Report, and evaluated and identified wastewater needs in Uxbridge. The second phase is the identification and screening of alternative solutions to meet these wastewater needs, as documented in this Alternatives Screening Analysis Report. The last phase of the Project will consist of the development of a recommended plan. The last phase will also include a summary of the detailed evaluations to develop the recommended plan and public outreach to inform the public on the details of the plan.

This Alternatives Screening Analysis Report was completed through the coordinated efforts of the Town of Uxbridge Department of Public Works and GHD serving as the project consultant. Valuable assistance has been provided from the Town's Board of Health as well as a working group comprised of Town staff, GHD staff and Town volunteers.

The Town's water resources: groundwater, drinking water and surface waters form the basis of the Town's human health, environmental health and economic prosperity. All of these water resources are interconnected and must be properly managed for sustainable development.

The Town of Uxbridge is located in the Blackstone River Valley. The Town is located entirely in the Blackstone River watershed. The Uxbridge Wastewater Treatment Facility (WWTF), which was constructed in the 1970's and is owned and operated by the Town, discharges to the Blackstone River. The Blackstone River has been referred to as "America's hardest working river" and has been severely impacted by untreated sewage, industrial wastes and numerous dams and canals which impede the flow of its waters. The portion of the river that flows through Uxbridge has been classified as a 'Category 5' river in the Massachusetts Year 2012 Integrated List of Waters – which means that the river is considered impaired or threatened by one or more uses and requiring a Total Maximum Daily Load (TMDL) limit. A TMDL is the greatest amount of a pollutant (such as nutrients from a wastewater treatment facility) that a waterbody can accept and still meet water quality standards for protecting public health and maintaining the designated beneficial uses of the waterbody.

In 2013 the Town received a new National Pollutant Discharge Elimination System (NPDES) Permit (No. MA0102400). Because the facility was not designed to treat to the new, more stringent nutrient requirements, the Uxbridge WWTF is unable to meet certain conditions of the permit with its existing equipment.

Additionally, most of the equipment at the facility is over thirty five years old and well past its useful life. As the equipment continues to age the cost of operating and maintaining the existing

DRAFT

This document is in draft form. The contents, including any opinions, conclusions or recommendations contained in, or which may be implied from, this draft document must not be relied upon. GHD reserves the right, at any time, without notice, to modify or retract any part or all of the draft document. To the maximum extent permitted by law, GHD disclaims any responsibility or liability arising from or in connection with this draft document.

mechanical and electrical equipment, instrumentation, and controls becomes more difficult. Much of the equipment is obsolete and replacement parts are difficult and costly to obtain.

The Draft Needs Assessment also analyzed the portions of the Town that are not currently connected to the centralized system to determine whether environmental reasons exist for a major extension of the Town's existing collection system. No concentrated problematic areas for on-site wastewater disposal were found. It was concluded that the continued use of individual on-site septic systems is the most cost effective solution for properties currently outside the boundaries of the existing collection system.

ES.2 Summary of Alternative Technologies and Solutions

Alternative technologies and solutions were identified and screened in the following major categories:

- Sustainability considerations
- Individual on-site system and cluster system alternatives
- Centralized treatment system alternatives
- Satellite treatment system alternatives
- Treated water recharge technologies
- Collection system technologies
- Wastewater flow and loading reduction technologies

Many technologies and solutions were evaluated for each of these categories, as detailed in the following chapters. The following list identifies the alternative technologies and scenarios that are considered most feasible and will be further evaluated and discussed in the next phase of the study:

1. Sustainability Considerations
    - Water Conservation Opportunities
    - Energy Efficiency Opportunities
    - Energy Recovery Opportunities
    - Alternative Energy Opportunities
2. Individual On-site System and Cluster System Alternatives
    - Continued use of conventional Title 5 disposal systems
    - Decentralized treatment alternatives that are approved by MassDEP as part of their Innovative and Alternative (I/A) technology program for areas outside of the centralized sewer service areas in Uxbridge.
3. Preliminary Treatment Alternatives
    - Replacement of grinder and coarse bar screen with two fine screens and replacement of all mechanical equipment that is past its useful life.
4. Primary Treatment Alternatives
    - Replacement of all mechanical equipment that is past its useful life.

DRAFT

This document is in draft form. The contents, including any opinions, conclusions or recommendations contained in, or which may be implied from, this draft document must not be relied upon. GHD reserves the right, at any time, without notice, to modify or retract any part or all of the draft document. To the maximum extent permitted by law, GHD disclaims any responsibility or liability arising from or in connection with this draft document.

5. Secondary/Advanced Treatment Alternatives to attain Phosphorus Removal
    - Chemical addition and tertiary filtration
6. Secondary/Advanced Treatment Alternatives to attain Nitrogen Removal
    - Modified Ludzack-Ettinger (MLE) process
    - Integrated Fixed-Film Activated Sludge (IFAS) process
    - BioMag® process
7. Disinfection Alternatives
    - Chlorination
    - UV Disinfection
8. Post Aeration Alternatives
    - Mechanical Post Aeration
9. Support Facilities Alternatives
    - Replacement of all mechanical equipment that is past its useful life.
10. Residual Management Alternatives
    - Sludge thickening
    - Sludge dewatering
11. Odor Control Alternatives
    - Biofilter
12. Pump Station Alternatives
    - Replacement of all mechanical equipment that is past its useful life at the Main Pump Station
    - Replacement of the West River Pump Station
13. Satellite Treatment Alternatives
    - To be evaluated in the future if concentrated problematic areas for on-site wastewater disposal are found.
14. Treated Water Recharge Alternatives
    - To be evaluated in the future if concentrated problematic areas for on-site wastewater disposal are found.
15. Collection System Alternatives
    - To be evaluated in the future if concentrated problematic areas for on-site wastewater disposal are found.
16. Wastewater Flow and Loading Reduction Alternatives
    - Infiltration and Inflow (I/I) reduction to sewers
    - Reduction of household water consumption

DRAFT

This document is in draft form. The contents, including any opinions, conclusions or recommendations contained in, or which may be implied from, this draft document must not be relied upon. GHD reserves the right, at any time, without notice, to modify or retract any part or all of the draft document. To the maximum extent permitted by law, GHD disclaims any responsibility or liability arising from or in connection with this draft document.

- Continued use of the existing rate structure to discourage greater water consumption and wastewater generation

ES.3 No Action Alternative

The No Action Alternative is presented to identify the consequences of doing nothing.

The portions of the Town that are not serviced by the centralized treatment system would continue to utilize on-site wastewater disposal systems. Since the Draft Needs Assessment did not identify any concentrated areas of the Town that are problematic for on-site wastewater disposal the continued use of on-site wastewater disposal is a feasible and cost effective option.

Under the No Action alternative the Town would continue operating the Uxbridge WWTF with no improvements to upgrade the degree of wastewater treatment or to replace aging equipment. The cost of operating and maintaining the existing equipment is expected to increase as equipment becomes obsolete and replacement parts are more difficult and costly to obtain. The frequency of equipment failures is expected to increase, subsequently increasing operating cost and making compliance with the discharge permit effluent limits more difficult to achieve.

Because the Uxbridge WWTF was not designed to provide the degree of wastewater treatment necessary for consistent and reliable compliance with the new effluent limit for total nitrogen and the more stringent effluent limit for total phosphorus, permit non-compliance is expected. Permit non-compliance may cause or contribute to the degradation of water quality of the Blackstone River. If the Town did not demonstrate progress to meet the permit requirements, MassDEP would most likely initiate an enforcement action against the Town as allowed by state law.

ES.4 Future Evaluations to Identify a Recommended Plan

The first phase of the CWMP Project was the identification of the wastewater and nutrient management needs as documented by the Needs Assessment Report. This Alternative Screening Analysis Report documents the second major phase. The final phase of the Project will provide a detailed evaluation of cost effectiveness comparisons using present worth evaluation and evaluation of non-monetary factors. The following evaluations will be performed as part of the final phase:

1. Prepare a methodology of the planned detailed evaluations for project and regulatory review.
2. Perform present-worth evaluations of the alternatives identified in the Alternative Screening Analysis Report.
3. Perform non-monetary evaluations of the alternatives identified in the Alternative Screening Analysis Report.
4. Complete the present-worth analysis with the non-monetary evaluations to select the most appropriate management scenarios.
5. Develop and present the recommended Wastewater Management Plan.
6. Submit the Wastewater Management Plan for regulatory and public reviews.

DRAFT

This document is in draft form. The contents, including any opinions, conclusions or recommendations contained in, or which may be implied from, this draft document must not be relied upon. GHD reserves the right, at any time, without notice, to modify or retract any part or all of the draft document. To the maximum extent permitted by law, GHD disclaims any responsibility or liability arising from or in connection with this draft document.

Table of Contents

1. Introduction 1
   - 1.1 Background and Purpose 1
   - 1.2 Project Purpose 1
   - 1.3 Planning Area 1
   - 1.4 Planning Period 1
   - 1.5 Project Background and Issues 1
   - 1.6 Planned Public Review 3
   - 1.7 Purpose and Organization of the Alternatives Screening Analysis Report 3
2. Screening Approach and Criteria 5
   - 2.1 Introduction 5
   - 2.2 Methodology for Identification and Screening of Alternative Technologies 5
3. Environmental and Sustainability Considerations 11
   - 3.1 Introduction 11
   - 3.2 Background 11
   - 3.3 Water Conservation 12
   - 3.4 Energy Efficiency 13
   - 3.5 Energy Recovery 15
   - 3.6 Alternative Energy 16
   - 3.7 Current Renewable Energy Funding Available 17
   - 3.8 Summary 17
4. Individual On-Site System and Cluster System Alternative 18
   - 4.1 Introduction 18
   - 4.2 Comparison of Individual On-Site Systems with Centralized Collection and Treatment 18
   - 4.3 Individual On-Site Systems and Cluster Systems 19
   - 4.4 Cluster Treatment Systems 29
   - 4.5 Screening of Alternative Decentralized Technologies 29
5. Alternatives for Centralized and Satellite Wastewater Treatment Facilities and Sites 30
   - 5.1 Introduction 30
   - 5.2 No Action Alternative 31
   - 5.3 “Fix It First” Alternative 31
   - 5.4 Wastewater Treatment System Components 31
   - 5.5 Centralized Treatment Alternatives 34
   - 5.6 Satellite Wastewater Treatment 74
   - 5.7 Alternatives for Treatment System Expansion and Upgrade at the Uxbridge WWTF 82

DRAFT

This document is in draft form. The contents, including any opinions, conclusions or recommendations contained in, or which may be implied from, this draft document must not be relied upon. GHD reserves the right, at any time, without notice, to modify or retract any part or all of the draft document. To the maximum extent permitted by law, GHD disclaims any responsibility or liability arising from or in connection with this draft document.

6. Treated Water Recharge Technologies and Alternative Sites 85
6.1 Introduction 85
6.2 Identification of Treated Recharge Technologies Used to Recharge to the Groundwater System 85
6.3 Screening of Treated Water Recharge Technologies 89
7. Collection System Technologies 91
7.1 Introduction 91
7.2 Collection System Alternatives 91
8. Flow and Loading Reduction Alternatives 97
8.1 Introduction 97
8.2 Infiltration and Inflow (I/I) Reduction 97
8.3 Reduction of Household Water Consumption 97
8.4 Pricing Policy for Water and Wastewater Service 98
8.5 Wastewater Reuse and Recycling 98
8.6 Reduction of Wastewater Loadings 98
8.7 Waterless Toilets 99
8.8 Growth Management Regulation 99
8.9 Summary 100
9. Alternative Plan Identification and Future Evaluations 101
9.1 Introduction 101
9.2 Discussion of the No Action Alternative 101
9.3 Alternatives Evaluated For Potential Future Needs 102
9.4 Alternatives Recommended for Further Evaluation 103
9.5 Next Steps 105

DRAFT

Table Index

3-1 National Grid Scoping Study Uxbridge – WWTF Power Breakdown
3-2 Sustainability Considerations

Figure Index

5-1 Wastewater Treatment System Components
5-2 Uxbridge WWTF Chemical Phosphorus Addition
5-3 Typical Setup for Phosphorus Removal with Tertiary Filter
5-4 Oxidation Ditch
5-5 Multi-Stage Nitrogen and Phosphorus Removal Schematic
5-6 Modified Bardenpho Process (5-Stage)

This document is in draft form. The contents, including any opinions, conclusions or recommendations contained in, or which may be implied from, this draft document must not be relied upon. GHD reserves the right, at any time, without notice, to modify or retract any part or all of the draft document. To the maximum extent permitted by law, GHD disclaims any responsibility or liability arising from or in connection with this draft document.

5-7 A2/O Process
5-8 Virginia Initiative Plant (VIP) Process
5-9 University of Cape Town (UCT)
5-10 Multiple-Stage Processes for Nitrogen Removal
5-11 Multiple-Stage Cyclical Aeration
5-12 Membrane Bioreactor System
5-13 Sequencing Batch Reactor
5-14 BioMag Process Schematic
5-15 Multiple-Stage Processes
5-16 Rotating Biological Contactor
5-17 Denitrifying Filter
5-18 Integrated Fixed-Film Activated Sludge (IFAS)
5-19 Amphidrome® System
5-20 Constructed Wetland
5-21 Solar Aquatics Systems

Appendices

Appendix A - (Title name for Appendix)

DRAFT

This document is in draft form. The contents, including any opinions, conclusions or recommendations contained in, or which may be implied from, this draft document must not be relied upon. GHD reserves the right, at any time, without notice, to modify or retract any part or all of the draft document. To the maximum extent permitted by law, GHD disclaims any responsibility or liability arising from or in connection with this draft document.

Glossary of Common Acronyms

ACEC	Areas of Critical Environmental Concern
BAF	Biologically Active Filter
BNR	Biological Nitrogen Removal
BOD	Biochemical Oxygen Demand
BOD_5	Five-Day Biochemical Oxygen Demand
BOH	Board of Health
CHP	Combined Heat and Power
CNR	Cyclical Nitrogen Removal
CWMP	Comprehensive Wastewater Management Plan
db	Decibel
DO	Dissolved Oxygen
eMLE	Enhanced Modified Ludzack-Ettinger
ENR	Enhanced Nitrogen Removal
EPA	Environmental Protection Agency
gpd	Gallons Per Day
gpd/sf	Gallons Per Day Per Square Foot
HRT	Hydraulic Retention Time
I/A	Innovative and Alternative
ICEAS	Intermittent Cycle Extended Aeration System
I/I	Infiltration and Inflow
IFAS	Integrated Fixed-Film Activated Sludge
kWh	Kilowatt-hour
LEED	Leadership in Energy and Environmental Design
MassCEC	Massachusetts Center for Clean Energy
MassDED	Massachusetts Department of Economic Development
MassDEP	Massachusetts Department of Environmental Protection
MBBR	Moving Bed Biofilm Reactor
MBR	Membrane Bioreactor
MGD	Million Gallons Per Day
mg/L	Milligrams Per Liter
MLE	Modified Ludzack-Ettinger
MLSS	Mixed Liquor Suspended Solids
N_2	Nitrogen
NaOCl	Sodium Hypochlorite
NH_3-N	Ammonia Nitrogen
NHESP	Natural Heritage and Endangered Species Program

DRAFT

This document is in draft form. The contents, including any opinions, conclusions or recommendations contained in, or which may be implied from, this draft document must not be relied upon. GHD reserves the right, at any time, without notice, to modify or retract any part or all of the draft document. To the maximum extent permitted by law, GHD disclaims any responsibility or liability arising from or in connection with this draft document.

NO_3-N	Nitrate Nitrogen
NPDES	National Pollutant Discharge Elimination System
NREL	National Renewable Energy Laboratory
O&M	Operation and Maintenance
PAC	Polyaluminum Chloride
psi	Pounds Per Square Inch
PV	Photovoltaic
PVC	Polyvinylchloride
RAS	Return Activated Sludge
RBC	Rotating Biological Contactor
REC	Renewable Energy Certificates
REPI	Renewable Energy Production Incentives
ROW	Right-of-Way
SBR	Sequencing Batch Reactor
SCADA	Supervisory Control and Data Acquisition
SREC	Solar Renewable Energy Certificates
SRF	State Revolving Fund
SRT	Solids Retention Time
STEG	Septic Tank Effluent Gravity
STEP	Septic Tank Effluent Pump
UV	Ultraviolet
THM	Trihalomethanes
TKN	Total Kjeldahl Nitrogen
TMDLs	Total Maximum Daily Loads
TOC	Total Organic Carbon
TP	Total Phosphorus
TSS	Total Suspended Solids
UCT	University of Cape Town
USEPA	United States Environmental Protection Agency
VIP	Virginia Initiative Plant
WEF MOP 32	Water Environment Federation Manual of Practice No. 32
WWTF	Wastewater Treatment Facility

DRAFT

This document is in draft form. The contents, including any opinions, conclusions or recommendations contained in, or which may be implied from, this draft document must not be relied upon. GHD reserves the right, at any time, without notice, to modify or retract any part or all of the draft document. To the maximum extent permitted by law, GHD disclaims any responsibility or liability arising from or in connection with this draft document.

1. Introduction

1.1 Background and Purpose

This Alternatives Screening Analysis Report is the second of three reports that will be produced for the Town of Uxbridge (Town) Comprehensive Wastewater Management Planning Project (Project). The first of these reports was the Needs Assessment, dated October 2014, which documented the nutrient management and wastewater needs for the Town. The third report will be the Detailed Evaluation of Alternatives and Recommended Plan.

The purpose of the Alternatives Screening Analysis Report is to identify and screen alternative wastewater and nutrient management technologies and solutions so that a group of alternative management plans can be formulated to meet the Town's wastewater and nutrient management needs.

1.2 Project Purpose

The purpose of the Comprehensive Wastewater Management Planning (CWMP) Project is to provide an environmentally and economically sound plan for wastewater treatment and nutrient management in the Town of Uxbridge (Town) for the next 20 years. The CWMP Project will assess the wastewater and nutrient-related needs in the Town; evaluate appropriate mitigation measures for those needs; and develop a recommended plan for improved management systems. The primary purpose of the Project is to develop a plan to:

- Protect public health.
- Protect the water supply.
- Plan for and maintain flexibility to meet future Massachusetts Department of Environmental Protection (MassDEP) and United States Environmental Protection Agency (USEPA) requirements (as defined in the NPDES permit).
- Incorporate the wastewater infrastructure and facilities planning into a cohesive document.

1.3 Planning Area

The Town of Uxbridge is located in the Blackstone River Valley. With a total land area of 30 square miles, the Town is bordered by the Massachusetts towns of Douglas, Mendon, Millville, Northbridge and Sutton, and the Rhode Island towns of Burrillville and North Smithfield. The Blackstone River and two of its tributaries—the Mumford River and the West River—flow through the Town.

1.4 Planning Period

The CWMP will provide a recommended plan for wastewater facilities and nutrient management recommendations in Town for the 20 year planning period of 2015 to 2035.

1.5 Project Background and Issues

Project background and existing wastewater issues within the Town of Uxbridge were reviewed in detail in the Draft Needs Assessment Report. A brief summary of the material is provided below.

DRAFT

This document is in draft form. The contents, including any opinions, conclusions or recommendations contained in, or which may be implied from, this draft document must not be relied upon. GHD reserves the right, at any time, without notice, to modify or retract any part or all of the draft document. To the maximum extent permitted by law, GHD disclaims any responsibility or liability arising from or in connection with this draft document.

1.5.1 Existing Centralized Wastewater Infrastructure

The Town of Uxbridge owns and operates the Uxbridge Wastewater Treatment Facility (WWTF), which treats wastewater collected from commercial and residential districts north and east of Route 146. The facility commenced operation in the 1970s. The facility has not undergone any major upgrades since it was constructed and is currently operating with much of its original equipment. Most of the equipment at the facility is over 30 years old and past its useful life. As the equipment continues to age, it becomes much less reliable and more difficult to service.

In 2013 the facility was issued a new National Pollutant Discharge Elimination System (NPDES) Permit (No. MA0102440). Several of the effluent limits in the 2013 permit are more stringent than the 1999 permit (which the facility was previously operating under).

The Town of Uxbridge cannot meet the conditions of its new permit with its existing wastewater infrastructure. The existing facility needs to be upgraded in order to both replace equipment that has exceeded its useful life and to meet the more stringent permit requirements. This Alternatives Analysis will provide an evaluation of alternatives that could be implemented to satisfy both of these needs.

1.5.2 Existing On-Site Systems

Approximately half of the Town's population relies upon on on-site wastewater disposal systems. The Draft Needs Assessment Report divided this portion of the Town into three Study Areas, based on geographic divisions, and analyzed environmental factors that may preclude portions of the Town from being well suited for on-site wastewater disposal systems. Factors considered included:

- Soil type
- High groundwater areas
- 100-year flood zones
- Depth to bedrock
- Lot size
- Drinking water protection areas
- Buffer areas around water bodies and wetlands
- Priority estimated habitats
- Areas of Critical Environmental Concern (ACEC)
- Title 5 pass/fails
- Groundwater quality

The Needs Assessment analyzed both general indicators and site-specific data.

While the Needs Assessment Report found no concentrated, problematic areas for on-site wastewater disposal based on site-specific data, general indicators for areas that may have sub-optimal on-site wastewater disposal characteristics do exist in the Town.

The Alternatives Analysis provides an evaluation of alternatives that could be considered if, during future development in the Town, areas are found that are unsuitable for on-site wastewater disposal.

DRAFT

This document is in draft form. The contents, including any opinions, conclusions or recommendations contained in, or which may be implied from, this draft document must not be relied upon. GHD reserves the right, at any time, without notice, to modify or retract any part or all of the draft document. To the maximum extent permitted by law, GHD disclaims any responsibility or liability arising from or in connection with this draft document.

1.5.3 Summary

The following major conclusions and needs were identified in the Needs Assessment Report:

- Based on the available data, no needs for major sewer extensions in any of the Study Areas were found.
- The Uxbridge WWTF needs to be upgraded in order to meet the discharge requirements of its new NPDES permit.
- Much of the equipment at the over 30 year old Uxbridge WWTF has either reached or is approaching the end of its useful life and is in need of replacement.

1.6 Planned Public Review

Public outreach for this project has several comprehensive components. The outreach includes public presentations, a project website, and coordination with DEP. Activities to date are as follows:

- CWMP Advisory Group – The Department of Public Works solicited volunteers from within all Town Departments in February, 2014. Volunteers were also sought in public presentations before the Board of Selectmen in March, 2014. In addition to public works participation, four members of the community have volunteered and have been invited to all CWMP progress meetings, after the date that they volunteered. Individual updates have also been provided when individuals expressed an interest.
- Board of Selectmen Presentations – Presentations have been given on a regular basis to the Board of Selectmen (the group also serves as the Water and Sewer Commissioners). The dates for these presentations were March 24, 2014, July 28, 2014 and November 10, 2014.
- Planning Board Presentations – A presentation was given before the Planning Board on June 11, 2014 to inform this Board of the process in the event that any Board member or member of the public wanted to participate in the process.
- The DPW created a web site to inform the general public on the progress of the project as well as to provide links to critical documents such as presentation, reports, etc.
- DEP coordination meeting – In August of 2014, a meeting was held with the Town of Uxbridge, MassDEP CERO and MassDEP SRF program representatives. The Town was asked to invite the attendees from DEP to future progress meetings, which the Town has done on each occasion.
- CWMP Report – The CWMP is being produced in three phases. Each Phase has a report that is written upon its conclusion. As each phase is completed, the draft report is submitted to MassDEP, presented before the Board of Selectmen and uploaded to the project website allowing for interim reviews of the project efforts and public and regulatory comment.

1.7 Purpose and Organization of the Alternatives Screening Analysis Report

The Alternatives Screening Analysis Report is developed to summarize Phase 2 components of the Project. The report is divided into 10 chapters. Chapter 1 presents general introductory information about the CWMP Project and the Alternatives Screening Analysis Report. Chapter 2 describes the approach and criteria used for screening alternative treatment technologies and solutions. Chapter 3 outlines environmental and sustainability considerations. Chapters 4 identifies and screens

DRAFT

This document is in draft form. The contents, including any opinions, conclusions or recommendations contained in, or which may be implied from, this draft document must not be relied upon. GHD reserves the right, at any time, without notice, to modify or retract any part or all of the draft document. To the maximum extent permitted by law, GHD disclaims any responsibility or liability arising from or in connection with this draft document.

individual on-site system and cluster system alternatives. Chapter 5 identifies and screens alternatives for centralized and satellite wastewater treatment technologies and sites. Chapter 6 identifies and screens treated water recharge technologies and sites. Chapter 7 identifies and screens collection system technologies. Chapter 8 presents flow and loading reduction opportunities. Chapter 9 identifies the alternatives recommended for further evaluation and the outlines next steps to evaluate solutions for the Town's wastewater needs.

DRAFT

This document is in draft form. The contents, including any opinions, conclusions or recommendations contained in, or which may be implied from, this draft document must not be relied upon. GHD reserves the right, at any time, without notice, to modify or retract any part or all of the draft document. To the maximum extent permitted by law, GHD disclaims any responsibility or liability arising from or in connection with this draft document.

2. Screening Approach and Criteria

2.1 Introduction

As discussed in Chapter 1, the purpose of this report is to identify and screen alternative technologies and management concepts to be used in a detailed evaluation in the next phase of this Project. This chapter describes the approach and criteria for identifying and screening alternative technologies and sites.

2.2 Methodology for Identification and Screening of Alternative Technologies

The following five groups of alternative technologies, facility sites, and management concepts will be identified and screened:

1. Individual on-site system and cluster system alternatives.
2. Alternatives for centralized and satellite wastewater treatment facilities and sites.
3. Treated water recharge technologies and sites.
4. Collection system technologies.
5. Flow and loading reduction alternatives.

The five groups of alternative technologies are identified and discussed below:

Individual and Cluster On-Site Systems

These types of wastewater management systems typically have wastewater flows less than 10,000 gallons per day (gpd) and are regulated by MassDEP and local Boards of Health under the Title 5 regulations. These systems are often called “decentralized management” systems though there is no universally accepted definition or flow range for “decentralized management” systems. For the purpose of this report, the following definitions are used to categorize these types of wastewater management systems:

- Individual on-site systems serve one site and do not require a collection (sewer) system. They are privately owned and they are regulated by the Title 5 regulations.
- Cluster systems serve more than one property and require a collection (sewer) system to convey the wastewater from the properties to the treatment and recharge system. They can be privately or municipally owned. Cluster systems are regulated by the Title 5 regulations and can be used for maximum-day flows up to 10,000 gpd. This maximum-day flow typically corresponds to a maximum of 30 three-bedroom houses.

The following individual on-site system and cluster system technologies will be identified and screened (this list is based on MassDEP’s summary of innovative and alternative (I/A) technologies approved for use in Massachusetts as of October 2014):

DRAFT

This document is in draft form. The contents, including any opinions, conclusions or recommendations contained in, or which may be implied from, this draft document must not be relied upon. GHD reserves the right, at any time, without notice, to modify or retract any part or all of the draft document. To the maximum extent permitted by law, GHD disclaims any responsibility or liability arising from or in connection with this draft document.

1. Individual and multiple unit systems for flows less than 10,000 gpd.
    a. On-site systems approved for general use including Title 5 systems and I/A technologies:
        - Title 5 system
        - Recirculating sand filters that comply with Title 5
        - Bioclere®
        - Waterloo Biofilter®
        - AdvanTex®
        - NITREX®
        - SeptiTech®
        - Singulair® (for flows less than 2,000 gpd)
        - Orenco System Sand Filter
        - JET Aerobic
2. Non-discharge systems.
    a. Tight tanks
    b. Waterless toilets

These technologies will be described and screened based on their suitability for individual unit applications and for cluster systems in Uxbridge and on the criteria described in this chapter.

Centralized and Satellite Treatment Facilities

These types of wastewater management systems have wastewater flows greater than 10,000 gpd and are regulated by MassDEP through their groundwater discharge permit program, and must meet more stringent treatment requirements. There is no universally accepted flow definition that separates centralized from satellite systems. We have chosen definitions for these two types of systems that are consistent with general planning guidance as listed below:

- Satellite systems serve more than one property and require a collection (sewer) system. They require a MassDEP discharge permit and typically have pollutant and nutrient discharge limits and flows in the 10,000 gpd to 300,000 gpd range.
- Centralized systems typically treat flows greater than 300,000 gpd and require a MassDEP discharge permit for nutrients as well as other parameters. The Uxbridge WWTF is considered the centralized system in the Town of Uxbridge.

Standard centralized and satellite treatment system components include preliminary and primary treatment, secondary/advanced treatment, and treated water discharge. Systems may also include effluent filtration, effluent disinfection and post aeration depending on the type of treatment process, the facility location, and permitting requirements as set by MassDEP.

The following list summarizes the centralized satellite technologies which will be evaluated and screened in this report:

DRAFT

This document is in draft form. The contents, including any opinions, conclusions or recommendations contained in, or which may be implied from, this draft document must not be relied upon. GHD reserves the right, at any time, without notice, to modify or retract any part or all of the draft document. To the maximum extent permitted by law, GHD disclaims any responsibility or liability arising from or in connection with this draft document.

1. Preliminary Treatment
    - Grinding
    - Screening
2. Primary Treatment
    - Primary Clarification
3. Secondary/Advanced Treatment
    a. Physical/Chemical Wastewater Treatment Processes including:
        - Chemical addition for phosphorus removal
        - Filtration for phosphorus removal
        - Ion exchange
        - Ammonia stripping
        - Breakpoint chlorination

    b. Suspended Growth Biological Treatment Alternatives including:
        - Multiple-stage processes for nitrogen and phosphorus removal
        - Multiple-phase/cyclical aeration
        - Membrane bioreactors
        - Magnetite Ballasted Settling
        - Oxidation ditches
        - Sequencing batch reactors
        - Multiple sludge processes

    b. Attached Growth Treatment Alternatives including:
        - Rotating biological contactors
        - Denitrifying filters
        - Biological aerated filters
        - Integrated Fixed-Film Activated Sludge (IFAS) processes.
4. Effluent Disinfection Technologies
    - Chlorination
    - Ozone
    - Ultraviolet Radiation
5. Post Aeration
    - Cascade Aeration
    - Mechanical Post Aeration
6. Residual Management Alternatives
    - Sludge thickening and disposal at a regional facility
    - Sludge dewatering and disposal at a regional facility
    - Sludge dewatering and composting for distribution to the public
    - Land application of sludge
7. Odor Control Alternatives
    - Chemical odor control
    - Packed tower scrubber

DRAFT

This document is in draft form. The contents, including any opinions, conclusions or recommendations contained in, or which may be implied from, this draft document must not be relied upon. GHD reserves the right, at any time, without notice, to modify or retract any part or all of the draft document. To the maximum extent permitted by law, GHD disclaims any responsibility or liability arising from or in connection with this draft document.

- Activated carbon filter
- Biofilter
- Activated sludge diffusion
- Specialty types

8. Satellite Wastewater Treatment Facilities
    a. Suspended Growth Biological Treatment
    b. Attached Growth (Fixed Film) Biological Wastewater Treatment
        - Wood chip filters
        - Amphidrome System®
    c. Plant and Biological Systems:
        - Hydroponic systems
        - Constructed wetlands
        - Solar Aquatics®
        - Lagoons
9. Potential New Treatment Plant Sites

Treated Water Recharge Alternatives

This group of alternatives will identify and screen technologies and potential sites to recharge the treated water, from satellite treatment facilities, back to the natural environment. The following technologies will be investigated:

1. Sand infiltration beds
2. Subsurface infiltration
3. Spray irrigation
4. Well injection
5. Wick well technology
6. Drip irrigation
7. Treated surface water discharge

Collection System Technologies

Although not required for any environmental reason that were identified in the Draft Needs Assessment Report the following collection system technologies will be evaluated and screened in the event they are needed in the future:

1. Gravity sewers and pumping stations
2. Pressure sewers and grinder pumps
3. Septic tank effluent sewers
4. Vacuum sewer systems

Screening of Wastewater Management Technologies

The wastewater management technologies will be described to allow the reader to understand the technology and related process.

DRAFT

This document is in draft form. The contents, including any opinions, conclusions or recommendations contained in, or which may be implied from, this draft document must not be relied upon. GHD reserves the right, at any time, without notice, to modify or retract any part or all of the draft document. To the maximum extent permitted by law, GHD disclaims any responsibility or liability arising from or in connection with this draft document.

Advantages and disadvantages of all of the alternatives will be presented. The screened technologies will then have system characteristics summarized with respect to a set of standard criteria to allow a side-by-side comparison. The summary is typically in the form of a tabular matrix and will end with a recommendation to either eliminate the technology or retain it for further evaluation. The following is a summary of the standard criteria that will be used for screening alternative technologies:

1. **Relative Capital Costs.** Relative capital costs for each alternative will be identified and compared to the other alternatives.
2. **Relative Operation and Maintenance Costs.** Costs to operate and maintain a typical installation of an alternative will be identified and compared to other alternatives.
3. **Flexibility.** Flexibility of a treatment system relates to the ability of that system to respond to seasonal or future changes in flows, loads, and effluent requirements.
4. **Environmental Considerations Including Energy Use and Sensitive Environmental Receptors.** Energy used to operate an alternative will be noted and compared to the other alternatives. Impact of alternatives to sensitive environmental receptors will also be considered.
5. **Effluent Quality.** Wastewater treatment systems provide various degrees of pollutant removal of Biological Oxygen Demand (BOD), TSS, nitrogen, and phosphorus. The expected effluent quality for each treatment technology will be identified and compared.
6. **Regulatory Requirements.** This criterion includes a discussion regarding the permits, variances, and monitoring requirements of federal, state, and regional regulatory agencies.
7. **Potential for Air Emissions.** The potential for odors and other air emissions from treatment systems will be discussed.
8. **Land Requirements.** The amount of land needed for each alternative treatment system will be discussed.
9. **Anticipated Public Acceptance.** This criterion involves how the public may react to a specific type of treatment system. Major public concerns regarding these alternatives are expected to include relative cost of installation, visibility, potential for odors, operations and maintenance requirements, and the perceived impact of proposed facilities on neighboring residents.
10. **Ease of Implementation.** Implementation issues will be discussed such as methods the Town could use to monitor and operate on-site systems or treatment plants over the expected lifetime of the treatment system. Management issues to be discussed include public or private ownership of treatment facilities, obtaining land for multiple home treatment sites, and Town regulations needed to address the potential administrative issues.
11. **Maintenance Requirements and Complexity of Operation.** This criterion is related to the complexity and number of mechanical components of each treatment process. Long-term reliability and the level of skill needed to maintain a technology will be considered. Reliability and technical feasibility of a process or plan is a function of how consistently it is expected to function and to achieve required effluent limits. In general, long-term reliability decreases as the complexity of mechanical equipment increases.

DRAFT

This document is in draft form. The contents, including any opinions, conclusions or recommendations contained in, or which may be implied from, this draft document must not be relied upon. GHD reserves the right, at any time, without notice, to modify or retract any part or all of the draft document. To the maximum extent permitted by law, GHD disclaims any responsibility or liability arising from or in connection with this draft document.

Fix it First Alternative

The “Fix it First” alternative focuses on optimizing existing infrastructure through the following practices:

- Continuing to use existing facilities while optimizing performance by repairing and/or upgrading existing infrastructure.
- Improving operations and maintenance of existing facilities.
- Increasing water conservation.
- Implementing best management practices.

This alternative will be considered for all existing infrastructure.

Flow and Loading Reduction Alternatives

These are alternatives to reduce wastewater flows and loadings and thereby reduce costs for construction and operation of wastewater facilities. The following alternatives and management opportunities will be reviewed for their application in Uxbridge:

1. Inflow and infiltration (I/I) reduction
2. Reduction of household water consumption
3. Review of the Town’s water pricing structure
4. Wastewater reuse and recycling
5. Wastewater loading reduction opportunities
6. Growth management regulation

These alternatives are screened and the feasible options are recommended for further consideration.

DRAFT

This document is in draft form. The contents, including any opinions, conclusions or recommendations contained in, or which may be implied from, this draft document must not be relied upon. GHD reserves the right, at any time, without notice, to modify or retract any part or all of the draft document. To the maximum extent permitted by law, GHD disclaims any responsibility or liability arising from or in connection with this draft document.

3. Environmental and Sustainability Considerations

3.1 Introduction

This chapter outlines environmental and sustainability considerations to be considered during both the planning and design phases of the Project—including water conservation, energy efficiency, energy recovery, and alternative energy.

3.2 Background

The Environmental Protection Agency (EPA) estimates that water and wastewater treatment together represent approximately 3% of the total energy consumption in the United States. It is typically one of the largest energy users in a community, often accounting for 30 to 60% of a municipal government's energy usage (U.S. EPA, 2008). There are many opportunities to reduce the total energy usage at a facility; both to reduce the carbon footprint of the facility and to realize operations savings through the minimization of wasted power.

WEF MOP 32 defines energy conservation measures as 'physical improvement, plant operation, or equipment maintenance practices that result in a reduction in utility or operating cost.' Several rating systems have been developed to help identify energy reduction measures and sustainability opportunities at facilities—including Leadership in Energy and Environmental Design (LEED) certification and the Envision Rating System. Additionally, many industry design standards including TR-16 (which is considered the New England design standard) incorporate sustainability considerations into their guidelines. The promotion of clean energy through the maximization of energy efficiency and renewable energy opportunities is encouraged by the Commonwealth of Massachusetts Sustainable Development Principles.

DRAFT

LEED Certification

LEED certification is a formal green building design process in which buildings are rated based on achievements in sustainable design and performance of buildings. Obtaining LEED certification for a building can be a large effort. However even if a building does not apply for certification, following the LEED process can help identify useful design features that in many cases can be no more costly than the standard type of construction, but offer a higher quality working environment and can be less costly to operate in the long run. At this time LEED certification can only be obtained for individual buildings, not for a wastewater treatment facility in its entirety.

Envision Rating System

The Envision Rating System is a rating system developed for rating infrastructure projects—including wastewater treatment plants. Envision focuses on the sustainability of infrastructure projects and their overall contribution to the communities they serve.

TR-16 Design Guidelines

Sustainability considerations are covered in the 2011 TR-16 Guides for the Design of Wastewater Treatment Works and include guidelines for the following topics:

- Water Conservation
- Energy Conservation

This document is in draft form. The contents, including any opinions, conclusions or recommendations contained in, or which may be implied from, this draft document must not be relied upon. GHD reserves the right, at any time, without notice, to modify or retract any part or all of the draft document. To the maximum extent permitted by law, GHD disclaims any responsibility or liability arising from or in connection with this draft document.

- Site Considerations
- Design Considerations for Non-Process Buildings

3.3 Water Conservation

The Commonwealth of Massachusetts Executive Office of Energy and Environmental Affairs and Water Resources Commission developed the 'Massachusetts Water Conservation Standards' (last updated in 2012) to set state-wide goals for water conservation and water-use efficiency. The document discusses both the environmental benefits of water conservation and the potentially significant financial savings of water conservation through reduced operation and maintenance costs, reduced wastewater treatment costs, resulting increase in water and wastewater treatment plant capacities and savings from avoiding having to find and develop new sources of water for the community. Water conservation efforts that can be undertaken by a wastewater treatment facility include installing reduced flow plumbing, reducing infiltration and inflow in the collection system, maximizing reuse of reclaimed wastewater and implementing water conserving landscaping practices.

Reduced Flow Plumbing

Reduced flow plumbing should be considered in design whenever possible and permitted by the local plumbing code. Devices that can be installed in the facility to reduce water consumption include water-saving toilets, reduced flush devices, and restricted flow shower heads.

Reducing Infiltration and Inflow

Locating and repairing sources of inflow and infiltration in the collection system helps minimize the amount of water which needs to be pumped to and treated by the facility.

The I/I analysis conducted by Beta Group Inc. in 2006, which is described in detail in Chapter 5 of the Draft Needs Assessment Report, recommended several sections of the existing collection system for further investigation to determine whether cost-effective I/I reduction measures could be implemented at these locations.

Reclaimed Wastewater Reuse

TR-16 recommends conducting an assessment to determine if there are any economic effluent reuse opportunities at a facility in order to minimize the use of potable water at the facility. Plant water is currently used for spray wash on the clarifiers, for the gravity thickener, grit washing, and pump seal systems. Increasing treated wastewater recharge and reuse is one of the ten major recommendations of the 2004 Massachusetts Water Policy issued by the Executive Office of Environmental Affairs.

Landscaping

Wherever possible, TR-16 recommends that native species be used in landscaping to eliminate supplementary watering needs. Landscaping features, such as open-grid pavers, should be considered to minimize stormwater runoff (and pollutant loading through runoff), and heat island effect from paved surfaces. Promoting stormwater recharge close to its site of origin is one of the ten major recommendations of the 2004 Massachusetts Water Policy issued by the Executive Office of Environmental Affairs.

DRAFT

This document is in draft form. The contents, including any opinions, conclusions or recommendations contained in, or which may be implied from, this draft document must not be relied upon. GHD reserves the right, at any time, without notice, to modify or retract any part or all of the draft document. To the maximum extent permitted by law, GHD disclaims any responsibility or liability arising from or in connection with this draft document.

3.4 Energy Efficiency

Because of their often small size, many energy efficiency projects have relatively low capital costs and a short payback period. Together the combination of many small projects designed to lower the amount of energy usage at a plant can lead to substantial overall energy savings. Regional utilities often offer financial incentives to complete energy efficiency upgrades.

A Scoping Study was prepared by Energy New England for National Grid in April 2009 to outline energy efficiency measures that could be implemented at the Uxbridge WWTF. National Grid has a customer rebate program that could potentially assist in funding the six potential energy conservation measures they identified. The six items are:

1. Replacement of existing centrifugal blowers with higher efficiency turbo units.
2. Installation of submersible mixers in the anoxic zone.
3. Replacement of coarse bubble diffusers with a fine bubble system.
4. RAS flow pacing based on plant influent flow.
5. Grit and septage blower cycling.
6. Pump station heating and ventilation modifications to minimize introduction of ventilation air during winter months.

In order to obtain funding the Town would need to submit a proposal for further evaluation by a National Grid designated Technical Assistance Contractor. The evaluation would be partially paid for by the utility. The projects could obtain funding through National Grids custom incentive program.

Table 3-1 summarizes the energy breakdown for the Uxbridge WWTF from the National Grid Scoping Study. The study estimated that the facility uses approximately 2,576 kilowatt-hour (kWh) of electricity per million gallons of wastewater treated, which is in the typical range for regional wastewater treatment facilities of similar size.

DRAFT

Table 3-1 National Grid Scoping Study Uxbridge - WWTF Power Breakdown

System	Energy Use
Secondary Treatment / Aeration System	62%
Primary Clarification	4%
Grit Removal and Septage	6%
Raw Wastewater Pump Station	10%
Building Systems	8%
Chemical Use	0.29%
Sludge Handling	3%
Plant Water System	8%

Energy Audit

An energy audit is used to determine if the equipment at a facility is properly sized for a process. The audit might include motor sizing and analyzing the heating/lighting in existing buildings to see if their efficiency can be increased through better insulation, more efficient light bulbs, use of natural lighting, etc.

This document is in draft form. The contents, including any opinions, conclusions or recommendations contained in, or which may be implied from, this draft document must not be relied upon. GHD reserves the right, at any time, without notice, to modify or retract any part or all of the draft document. To the maximum extent permitted by law, GHD disclaims any responsibility or liability arising from or in connection with this draft document.

Optimizing Existing Infrastructure

During design, existing infrastructure should be evaluated to determine if anything that is scheduled to be demolished can be used in future construction.

Sub-Metering

Sub-metering tracks energy usage through the use of individual meters and other electrical consumption indicators. TR-16 recommends using separate meters to monitor areas of major energy use at the plant.

Energy Management System

Energy management systems are used to lock out specified process operations during periods of peak energy demand in order to minimize demand charges from the local utility. According to the Scoping Study performed by National Grid the 360 kW diesel powered emergency generator is adequately sized to allow the plant to shed its full load during a demand response event. Incentivized programs are available through ISO-NE that provides customers with a monthly incentive payment in exchange for committing to reducing energy consumption to a pre-determined amount when needed. The Uxbridge WWTF is currently participating in the ISO-NE program.

Pump Considerations

Aeration system blowers can potentially be oversized if the expected population growth during the design phase has not yet occurred or if the organic loading entering the plant decreases due to a reduction in population. Energy savings can be realized by replacing larger blowers with one or more smaller units, installing variable frequency drives, or installing inlet throttling. TR-16 recommends installing dissolved oxygen (DO) probes in aeration systems in order to match air supplied by blowers to the systems need and reduce energy consumption. Because of their age, the facilities pumps should be tested to determine if they are operating at efficiencies near their original design points.

Ventilation Systems

Ventilation systems can add significant energy costs. Codes should be examined for provisions that allow for lower heating requirements and fewer air changes when an area is unoccupied. Both these changes will reduce energy requirements at the facility.

Instrumentation and Control Systems

Instrumentation and control systems are used to help match supply with demand. Supervisory control and data acquisition (SCADA) software can be used to monitor and control large portions of a facility. SCADA can be configured to monitor energy usage trends and to remotely adjust the system to current conditions through the measurement of process variables such as liquid and gas flow rates, chemical residual, and dissolved oxygen concentrations.

Lighting

Energy efficiency measures to be considered for the lighting system include adding motion sensors on lights in non-process buildings, using high-efficiency fixtures, and maximizing the use of natural light through the use of windows, translucent panels, skylights, etc. to reduce reliance on artificial lighting. In order to limit light pollution, light sensors or light timers should be considered and exterior lighting should be limited to what is required by local codes or for safety.

DRAFT

This document is in draft form. The contents, including any opinions, conclusions or recommendations contained in, or which may be implied from, this draft document must not be relied upon. GHD reserves the right, at any time, without notice, to modify or retract any part or all of the draft document. To the maximum extent permitted by law, GHD disclaims any responsibility or liability arising from or in connection with this draft document.

3.5 Energy Recovery

Wastewater facilities have historically been treated as receivers of waste products that need to be handled as waste products. In reality, wastewater facilities receive waste products that can be recovered as valuable resources. These resources include potential energy from water elevations, energy rich by-products, and heat recovery.

Hydropower

Hydropower can be used to harvest potential energy in a pipeline or at the outfall of a plant. The differential elevation between the water surface leaving the final process and the invert of the effluent discharge pipe provides a static elevation head that can potentially be converted into kinetic energy through a small hydro-turbine. Several low head generation devices could be explored.

Anaerobic Sludge Digestion

During anaerobic digestion, microorganisms break down organic materials in the absence of oxygen. A by-product of this process is the production of methane gas, which can be harvested and used as a biogas.

If a facility has excess capacity in its anaerobic digester it can also consider co-digestion where additional energy-rich organic waste materials such as fats, oils, grease, and food scraps are added to the existing waste stream in order to increase methane production. The Water Environment Federation Manual of Practice No. 32 – Energy Conservation in Water and Wastewater Facilities (WEF MOP 32) estimates that the biogas produced by the digestion of biosolids is approximately 60% methane. It is also possible to use the methane gas from anaerobic digestion as a hydrogen source to fuel hydrogen fuel cells. The biogas can be used to power boilers, generators, pumps, or blowers. In a combined heat and power (CHP) application the biogas can be used to power an engine or turbine and the waste heat can be recovered to heat the anaerobic digester.

Ideally a plant considering co-digestion should be located in close proximity to an industry or business that is a source of carbon-based waste. In addition to the increased energy production from accepting additional waste streams, co-generation can be a possible revenue stream for the facility.

Heat Recovery

Heat can be recovered from many areas at a WWTF. TR-16 recommends considering the following heat recovery applications:

- Heat recovery from blower rooms.
- Use of solar thermal heating units on south-facing walls with limited shade.
- Heat recovery units for ventilating rooms at high rates.
- Units that recover heat from effluent wastewater.

Typical wastewater effluent contains enough heat extractable through a heat exchanger to be considered as a building heating source. Heat is typically transferred through a water-to-refrigerant heat exchanger. Effluent characteristics that would need to be evaluated to determine the feasibility of an effluent heating system include temperature and total suspended solids.

DRAFT

This document is in draft form. The contents, including any opinions, conclusions or recommendations contained in, or which may be implied from, this draft document must not be relied upon. GHD reserves the right, at any time, without notice, to modify or retract any part or all of the draft document. To the maximum extent permitted by law, GHD disclaims any responsibility or liability arising from or in connection with this draft document.

3.6 Alternative Energy

Several potential sources of alternative energy production are present at a WWTF site. Depending on the amount of power produced and site conditions, the electricity generated from production can either be used on-site or fed back to the local utility in a net metering arrangement. In a net metering arrangement the facility sells back electricity produced in return for a predetermined credit towards its usage bill.

Solar

Solar photovoltaic (PV) arrays can be used by facilities with adequate space to produce renewable energy on-site. Arrays can be ground-mounted or roof-mounted depending on the orientation of the facilities buildings and available roof space. South facing roofs with minimal shadow interference provide the most ideal conditions for a roof-mounted solar array.

A shade analysis would need to be conducted at a potential site to determine the feasibility of a solar installation. On average, Massachusetts experiences 4.5 “sun hours per day” of solar energy. This means that over an entire year, direct sunlight hits an area for an average of 4.5 hours per day. In comparison Phoenix, Arizona experiences 6.4 sun hours per day. For an equivalent amount of power output from a PV panel in Massachusetts, the module area would be designed to be approximately 40% larger than in Phoenix.

Wind

Wind turbines can be used to harvest wind energy from sites with ideal conditions. According to the 50m Wind Power map produced by the National Renewable Energy Laboratory (NREL) the wind potential in the Uxbridge area is poor to marginal. If wind energy is to be considered at the Uxbridge WWTF an evaluation should be done at the specific area of interest. Wind resources can vary significantly at the micro level. WEF MOP 32 recommends that a potential site is monitored for wind potential for at least a year to determine its suitability for a wind turbine installation.

In addition to wind potential, several other factors need to be considered when assessing a potential turbine location including sound impact, shadow flicker, visual impact, and potential environmental permitting. Massachusetts State regulations (Massachusetts Air Pollution Control Regulation, Regulation 310 CMR 7.10) does not allow a rise of 10 decibels (db) or greater above background levels at a property boundary. Environmental considerations include whether the site is within a state designation of Natural Heritage and Endangered Species Program (NHESP) Open Space, Wetland, or other land-use designations or restrictions.

Geothermal

Geothermal systems use the nearly constant temperature of the earth to act as a heat source and a heat sink to heat and cool buildings through a heat pump. A heat exchanger is a system of pipes buried in the shallow ground near the building. A fluid, usually water or a mixture or water and antifreeze, circulates through the pipes and absorbs or gives off heat to the ground. In the winter the heat pump removes heat from the heat exchanger and pumps it through an air delivery system to heat a building’s interior. In the summer the system runs in reverse removing heat from the building and using the ground as a heat sink. Heat removed from the building during the summer can also be used to heat water.

DRAFT

This document is in draft form. The contents, including any opinions, conclusions or recommendations contained in, or which may be implied from, this draft document must not be relied upon. GHD reserves the right, at any time, without notice, to modify or retract any part or all of the draft document. To the maximum extent permitted by law, GHD disclaims any responsibility or liability arising from or in connection with this draft document.

3.7 Current Renewable Energy Funding Available

Several incentives are currently available for renewable energy installations. These include Solar Renewal Energy Certificates (SREC), Renewable Energy Certificates (REC) and Renewable Energy Production Incentives (REPI).

The SREC program provides a market-based credit for every megawatt of energy produced by a qualifying solar PV power production system. Credits are sold at auction through brokers with prices set between the market floor and market ceiling. The market ceiling is set by the Solar Alternative Compliance Payment which a utility must pay if they are unable to meet their Renewable Energy Portfolio.

The REC program is a similar market-based program. Whereas the SREC market is only set up for solar PV power producers, the REC market includes a much broader range of technologies but offers a much lower price per credit. It is applicable for solar PV, solar thermal electric, wind energy, small hydropower, landfill methane and anaerobic digester gas, marine or hydrokinetic energy, geothermal energy, and eligible biomass fuel.

The REPI is a federal program that provides financial incentives for renewable energy electricity produced and sold by qualified renewable energy generation facilities. This program is only available for facilities that export some of their energy instead of using it all on-site and offers an annual incentive payment of 1.5 cents per kilowatt-hour for the first 10 years of operation.

The Massachusetts Center for Clean Energy (MassCEC) has several programs to provide funding for feasibility, design, and construction of clean energy technologies.

3.8 Summary

The sustainability considerations discussed in Chapter 3 are summarized in Table 3-2. All of the considerations discussed in his chapter will be taken into consideration both during Phase 3 and the design of the upcoming WWTF upgrade.

Table 3-2 Sustainability Considerations

Water Conservation	Energy Efficiency	Energy Recovery	Alternative Energy
Reduced Flow Plumbing	Energy Audit	Hydropower	Solar
Reducing I/I	Optimizing Existing Infrastructure	Anaerobic Sludge Digestion	Wind
Reclaimed WW Reuse	Sub Metering	Heat Recovery	Geothermal
Landscaping	Energy Management Systems		
	Pump Considerations		
	Ventilation Systems		
	Instrumentation and Control Systems		
	Lighting		

DRAFT

This document is in draft form. The contents, including any opinions, conclusions or recommendations contained in, or which may be implied from, this draft document must not be relied upon. GHD reserves the right, at any time, without notice, to modify or retract any part or all of the draft document. To the maximum extent permitted by law, GHD disclaims any responsibility or liability arising from or in connection with this draft document.

4. Individual On-Site System and Cluster System Alternative

4.1 Introduction

The purpose of this chapter is to identify and screen individual On-Site System and Cluster System wastewater treatment and recharge technologies which could be used to mitigate wastewater issues identified in the Draft Needs Assessment Report.

While the Needs Assessment Report found no site-specific data indicating concentrated, problematic areas for on-site wastewater disposal, general indicators for areas that may have sub-optimal on-site wastewater disposal characteristics do exist in the Town. The technologies in this chapter should be considered if, during future development in the Town, individual sites are found to be unsuitable for on-site wastewater disposal.

4.2 Comparison of Individual On-Site Systems with Centralized Collection and Treatment

The individual on-site system and cluster system technologies in this chapter are presented as an alternative to satellite or centralized wastewater collection and treatment. To properly evaluate decentralized collection and treatment system alternatives, it is important to understand some of the general advantages and disadvantages of centralized collection and treatment systems, as summarized below.

Centralized collection and treatment has the following advantages:

- Wastewater is removed from the sewered area, minimizing health threats and nitrogen loading to the specific sewered area.
- Individual property owners will not have the responsibility of operating their own on-site or cluster wastewater treatment system.
- Fewer treatment sites would be required within the Town.
- Centralized and satellite wastewater treatment systems are reliable, provide high quality effluent, have professional operations staff, and have regular monitoring of the recharged water.
- Expanding sewers into portions of the Town that are adjacent to existing centralized collection facilities is typically less expensive than other treatment and recharge scenarios that require site purchase and new facilities. An “economy of scale” to treat and recharge the wastewater at one location can reduce capital and O&M costs.
- Fewer resources are required for the Town to operate one or two facilities as compared to many cluster or satellite systems.

Centralized collection and treatment has the following disadvantages:

- Sewer construction can potentially disrupt traffic and have a high capital cost associated with it (this disadvantage applies to cluster and satellite systems too.)

DRAFT

This document is in draft form. The contents, including any opinions, conclusions or recommendations contained in, or which may be implied from, this draft document must not be relied upon. GHD reserves the right, at any time, without notice, to modify or retract any part or all of the draft document. To the maximum extent permitted by law, GHD disclaims any responsibility or liability arising from or in connection with this draft document.

- Treated water recharge issues, including siting, capacity, and groundwater elevation impacts to low elevation properties, can limit the amount of treated water recharged in one location when recharging to groundwater.
- Centralized facilities may be located at great distances from the areas being served, increasing costs associated with wastewater collection and transfer.
- As outlined in the 'Massachusetts Water Conservation Standards' treatment and discharge at a centralized treatment facility can potentially transport wastewater out of its basin of origin and disturb the local water balance. A disturbed water balance can potentially lead to depleted groundwater and local stream flow.

4.3 Individual On-Site Systems and Cluster Systems

Both individual on site systems and cluster systems typically have wastewater flows less than 10,000 gpd and are regulated by MassDEP and local Boards of Health under the Title 5 regulations. These systems are often called "decentralized management" systems though there is no universally accepted definition or flow range for "decentralized management" systems. Systems with flows greater than 10,000 gpd require a MassDEP groundwater discharge permit and must meet more stringent discharge requirements. These larger systems (the ones needing a groundwater discharge permit) are often called "centralized and/or satellite" systems, though again, there is no universally accepted definition or flow range for these larger systems.

For the purpose of this report, the following definitions are used to categorize the various types of wastewater management systems:

- Individual on-site systems serve one site and do not require a collection (sewer) system. They are privately owned and are regulated by the Title 5 regulations.
- Cluster systems serve more than one property and require a collection (sewer) system to convey the wastewater from the properties to the treatment and recharge system. They can be privately or municipally owned. They are regulated by the Title 5 regulations and can be used for maximum-day flows up to 10,000 gpd. This maximum-day flow typically corresponds to a maximum of 30 three-bedroom houses.
- Satellite systems serve more than one property and require a collection (sewer) system. They require a MassDEP discharge permit. These systems may have stringent discharge limits, depending on the recharge location.
- Centralized systems typically treat flows greater than 300,000 gpd and need to meet stringent discharge limits (as required for a MassDEP discharge permit) for nutrients as well as other parameters. The Uxbridge WWTF is considered the centralized system in Uxbridge.

Individual on-site system and cluster system technologies are identified and screened in this Chapter based on their ability to address the wastewater needs in Uxbridge.

In the Draft Needs Assessment Report the portion for the Town not currently connected to the centralized system was divided into three study areas and analyzed to determine whether sub-areas existed where the continued use of Title 5 disposal systems may be problematic.

Though no concentrated, problematic areas for on-site wastewater disposal were found, general indicators do exist in all three study areas for locations that may be problematic for on-site

DRAFT

This document is in draft form. The contents, including any opinions, conclusions or recommendations contained in, or which may be implied from, this draft document must not be relied upon. GHD reserves the right, at any time, without notice, to modify or retract any part or all of the draft document. To the maximum extent permitted by law, GHD disclaims any responsibility or liability arising from or in connection with this draft document.

wastewater disposal. These technologies could be considered if, during future development in the Town, individual sites are found to be unsuitable for on-site wastewater disposal.

Individual properties with site limitations may need to consider the installation of I/A systems. The following is the definition of I/A technologies in accordance with Title 5 Regulations (310 CMR 15.002):

> *"Alternative Systems – Systems designed to provide or enhance on-site sewage disposal which either do not contain all of the components of an on-site disposal system constructed in accordance with 310 CMR 15.100 through 15.293 or which contain components in addition to those specified in 310 CMR 15.100 through 15.293 and which are proposed to the local approving authority and/or the Department for remedial, pilot, provisional, or general use approval pursuant to 310 CMR 15.280 through 15.289."*

Due to their higher level of treatment, several I/A technologies can be considered for sites that cannot meet the Title 5 sizing requirements for a leaching field.

MassDEP has identified the allowable uses for each approved I/A system and has assigned each into one of four categories: remedial, pilot, provisional, and general use. Each of these categories is defined below:

> *"The purpose of a **Piloting Approval** is to provide field testing and technical demonstration that an I/A technology can or cannot function effectively under relevant physical and climatological conditions at one or more pilot facilities. Although information obtained during piloting is likely to be relevant to long term operation and maintenance concerns about a particular alternative system, approval for piloting is not intended, in and by itself, to provide a full evaluation of these issues.*
>
> ***Provisional Approval** is intended to designate alternative systems that appear technically capable of providing levels of protection at least equivalent to those of standard on-site disposal systems and to determine whether, under actual field conditions in Massachusetts with broader usage than a controlled pilot setting, general use of the alternative system will provide such protection, and whether any additional conditions addressing long-term operation and maintenance and monitoring considerations are necessary to ensure that such protection will be provided.*
>
> *Certification for **General Use** is intended to facilitate the use, under appropriate conditions, of alternative systems that have been demonstrated to provide levels of environmental protection at least equivalent to those of standard on-site systems.*
>
> *The purpose of approval for **Remedial Use** is to allow for the rapid approval of an alternative system that is likely to improve existing conditions at a particular facility or facilities currently served by a failed, failing, or nonconforming system."*

For the purposes of this evaluation, the various on-site treatment system technologies are grouped as follows:

1. Conventional systems
    - Title 5 Systems
2. Systems to Consider for Size-Constrained Sites
    - Recirculating sand filters that comply with Title 5

DRAFT

This document is in draft form. The contents, including any opinions, conclusions or recommendations contained in, or which may be implied from, this draft document must not be relied upon. GHD reserves the right, at any time, without notice, to modify or retract any part or all of the draft document. To the maximum extent permitted by law, GHD disclaims any responsibility or liability arising from or in connection with this draft document.

- Bioclere®
- Waterloo Biofilter®
- AdvanTex®
- NITREX® (Provisional Use Approval)
- SeptiTech®
- Norweco Singulair® (for flows less than 2,000 gpd)
- Orenco System Sand Filter
- JET Aerobic

3. Non-Discharge Systems
    - Tight tanks
    - Waterless Toilets

4.3.1 Conventional Systems

Conventional Title 5 Systems

Conventional Title 5 systems consist of a septic tank, a distribution box, and a leaching area. Wastewater is discharged to the septic tank where settleable solids sink to the bottom of the tank, and floatables (like grease and toilet paper) rise to the surface, forming a scum layer. The septic tank prevents the solids from flowing to the leaching area where they could plug the soils and cause a failed septic system (septic tank effluent rising to the ground surface where it could cause odors or disease; or causing the building drains to backup). Decomposition of the organic matter occurs in the septic tank and produces ammonia and other dissolved pollutants. The liquid effluent then flows via the distribution box to a leaching area, where it percolates through stone bedding and the soil prior to reaching the groundwater.

Septic tank effluent ammonia-nitrogen levels are generally in the range of 20 to 60 mg/L. Septic tank effluent concentrations of BOD and TSS are approximately 140 to 200 mg/L and 50 to 90 mg/L, respectively. There are large ranges in the concentrations of these parameters because different households use varying amounts of water for showers, laundry, and household cleaning. The more water that is used, the more diluted the septic tank effluent will be. When a household conserves water, these concentrations will be higher. Title 5 systems reduce bacterial contamination primarily via filtration of effluent through a biological mat and the soils beneath the leaching area. The leaching area is designed to promote aerobic conditions; therefore, nitrification will occur, converting the ammonia nitrogen (NH_3-N) to nitrate nitrogen (NO_3-N). A small amount of denitrification occurs in a leaching system and some of the nitrogen will be converted to nitrogen gas to be released to the atmosphere.

Soil characteristics are an important consideration for the leaching systems. Clay and silt in the soil will result in low infiltration capacity of the soils and require a more expensive leaching system.

Title 5 systems have the following advantages:

- Well proven, mechanically simple technology.
- No significant public acceptance concerns when they are properly sited and designed.
- Generally, no pumps are required for flows less than 2,000 gpd.

DRAFT

This document is in draft form. The contents, including any opinions, conclusions or recommendations contained in, or which may be implied from, this draft document must not be relied upon. GHD reserves the right, at any time, without notice, to modify or retract any part or all of the draft document. To the maximum extent permitted by law, GHD disclaims any responsibility or liability arising from or in connection with this draft document.

- Low maintenance cost compared to other systems.
- They are very successful at protecting against failed septic systems and protecting public health.

They have the following disadvantages:

- Septic tank requires pumping every two to five years (as do all individual on-site systems).
- The effluent from the system is not well treated, and it is high in nitrogen and phosphorus.

4.3.2 Systems to Consider for Size-Constrained Sites

The following I/A systems can be considered for sites where site constraints are unsuitable for a conventional Title 5 septic system.

JET Aerobic Treatment System

This is an aerobic treatment system designed to achieve limits of 30 mg/L BOD and 30 mg/L TSS. Flow enters a primary settling chamber to remove solids, and then enters an aerated chamber where BOD and TSS removal is achieved. Aeration is provided by a mechanical aspirator that mixes the chamber and entrains air. The system uses both suspended growth and fixed-film bacteria to achieve the above stated removal.

Regular maintenance is required, as this is a mechanical system. Massachusetts requires that a quarterly preventative maintenance schedule be maintained for this system.

Jet systems have the following advantages:

- High effluent quality (BOD and TSS less than 30 mg/L).
- Allows for variances for reduction in leaching area or separation to groundwater.
- Approved for General Use in Massachusetts.

They have the following disadvantages:

- Higher capital cost and operation and maintenance costs than standard Title 5 systems.
- Requires routine maintenance, beyond the typical pumping of a septic tank.

Orenco Systems Sand Filters

Orenco Systems, Inc. manufacturers an intermittent sand filter and a recirculating trickling filter, which can be installed either as a component of a new septic system or retrofitted into an existing septic tank. Intermittent sand filters are designed to disperse daily septic tank effluent flow over a distribution area through the course of a 24 hour period. The even distribution provides for a higher quality final effluent because it allows for more efficient use of the soil absorption system. In a recirculating trickling filter, the septic tank is fitted with a small trickling filter on the top of the tank and a polyvinylchloride (PVC) pump vault inside the tank. The pump vault houses both a recirculation pump and an effluent pump. Inlet holes in the pump vault allow septic tank liquid to enter the vault, where it is either recirculated to the trickling filter or pumped to a leaching area. Nitrification occurs in the trickling filter, and with a recirculation ratio of 15 to 1, the effluent is denitrified after returning to the septic tank.

The Orenco filters have the following advantages:

- Better treatment than a Title 5 system can be attained and the leaching size can be reduced through variance.

This document is in draft form. The contents, including any opinions, conclusions or recommendations contained in, or which may be implied from, this draft document must not be relied upon. GHD reserves the right, at any time, without notice, to modify or retract any part or all of the draft document. To the maximum extent permitted by law, GHD disclaims any responsibility or liability arising from or in connection with this draft document.

- Septage pumping requirements are similar to those of a standard septic system.
- Proven technology.
- Approved for General Use in Massachusetts.
- Can be retrofited into an existing system.
- No significant environmental or public acceptance concerns when they are properly sited and designed.
- The process operation is flexible, with the ability to adjust cycle times.

The Orenco systems have the following disadvantages:

- Costs are typically higher than those of a standard septic system due to the filters and pumps.
- Temperature-sensitive in winter.
- More maintenance is required than a standard septic system due to mechanical and electrical components.

Recirculating (Non-Proprietary) Sand Filters

Sand, rock, or mixed media recirculating filters are non-proprietary systems with a recirculation tank and filter. Septic tank effluent flows from the septic tank to the recirculation tank, where it is pumped to the top of the filter and over the media. A portion of the flow is recirculated back to the recirculation tank and the remaining flow is discharged to the leaching area.

Anaerobic decomposition occurs in the septic tank, changing organic matter to ammonia. The ammonia is converted to nitrate in the aerobic filter media. The recirculated effluent then undergoes denitrification in the recirculation tank, and nitrates are converted to nitrogen gas. The nitrogen gas is lost to the atmosphere, yielding a net loss of nitrogen from the wastewater (the MassDEP certification for General Use indicates that the technology consistently produces an effluent with total nitrogen less than 25 mg/L). Many variations on the basic system are available to handle the specific needs of a project or site.

Maintenance includes periodic removal and replacement of the upper layers of media or backwashing and routine pump maintenance. In emergencies, such as power loss, the system can be designed to function as a flow-through system, with treatment equivalent to a standard Title 5 system.

Recirculating sand, rock, or mixed media filters have the following advantages:

- Better treatment than a conventional Title 5 septic system can be attained and the leaching size can be reduced.
- Approved for General Use by MassDEP in nitrogen-sensitive areas.
- Septage pumping requirements are similar to those of a conventional Title 5 septic system.
- Well proven technology with operating history since the 1970's.
- Systems do not require a high level of technical skill to operate when designed and installed correctly.
- No significant environmental or public acceptance concerns when they are properly sited and designed.

DRAFT

This document is in draft form. The contents, including any opinions, conclusions or recommendations contained in, or which may be implied from, this draft document must not be relied upon. GHD reserves the right, at any time, without notice, to modify or retract any part or all of the draft document. To the maximum extent permitted by law, GHD disclaims any responsibility or liability arising from or in connection with this draft document.

- The process has operational flexibility, with capability to adjust cycle times.

They have the following disadvantages:

- More maintenance is required than for a standard septic system due to mechanical and electrical components.
- Generally requires a larger land area than a standard septic system. Land surface may be occupied by the filter unit and not available for other uses.
- Systems are sensitive to temperature and must be protected from freezing.
- Costs are higher than those of a standard septic system.

Bioclere®

Bioclere® is a trickling filter and pump unit in one manufactured unit, designed to treat the anaerobic effluent from a septic tank, which is high in ammonia. The filter media is PVC or polypropylene. Effluent from the septic tank is pumped to a distributor, which spreads the wastewater over the top of the media, where aerobic conditions allow nitrification to occur (conversion of ammonia to nitrate). In the media, anaerobic micro-sites form where some limited denitrification (NO_3-N to N_2 [gas]) can take place. However, the majority of denitrification occurs when the effluent is collected at the base of the filter, and about 70% of the flow is recirculated back to the septic tank. The rest of the effluent is discharged to a leaching area.

Installation of the Bioclere® tank is relatively simple. One treatment unit contains a pump, a distributor, and the filter media. The treatment unit can either be retrofitted into existing septic systems by reusing the septic tank, piping, and leaching area, or it can be installed into a new system. The sealed double wall of the treatment unit provides insulation to minimize cold weather impacts. Nitrogen reductions of 50% are typical. The system can handle flow variations by varying the recirculation rates, and the units can handle increased flow by inserting additional media into the unit; however, the approval is limited to systems with flows less than 2,000 gpd.

The Bioclere® system has the following advantages:

- Better treatment can be attained and the leaching size can be reduced.
- Well proven technology in Massachusetts.
- Approved for General Use in Massachusetts in non-nitrogen sensitive areas.
- No significant environmental or public acceptance concerns when properly sited and designed.
- The process operation is flexible, with ability to adjust cycle times and add additional media.
- The basic system has relatively low operation and maintenance costs. The pump contained in the unit is easily accessible for replacement, when required.
- Septage pumping requirements are similar to those of a standard septic system.
- Nitrogen removal rates are approximately 50%.

They have the following disadvantages:

- Costs are typically higher than those of a standard Title 5 system.
- Maintenance agreements are required and have an associated cost.

DRAFT

This document is in draft form. The contents, including any opinions, conclusions or recommendations contained in, or which may be implied from, this draft document must not be relied upon. GHD reserves the right, at any time, without notice, to modify or retract any part or all of the draft document. To the maximum extent permitted by law, GHD disclaims any responsibility or liability arising from or in connection with this draft document.

- More maintenance is required than a standard Title 5 system due to mechanical and electrical components.
- Generally require a larger area (for the treatment tank) than a standard Title 5 system.
- Tops of Bioclere® tanks extend above ground.

Waterloo Biofilter®

The Waterloo Biofilter® consists of a 6-foot by 6-foot by 4-foot enclosure which includes filter media, an air ventilation system, and a wastewater distribution system. The distribution system pumps effluent from the septic tank and sprays it over the surface of the media. Wastewater trickles through the media while air is blown through the system. The system uses a small ventilation fan and an effluent pump timed via a control panel to dose effluent at frequent intervals over a 24-hour period. The effluent is collected at the base of the biofilter and a portion is recirculated back through the media, while the rest is discharged to a leaching area.

The Waterloo Biofilter® has the following advantages:

- Better treatment than a standard septic system can be attained and the leaching size can be reduced.
- Septage pumping requirements are similar to those of a standard septic system.
- No significant environmental or public acceptance concerns when they are properly sited and designed.
- The process operation is flexible, with the ability to adjust cycle times.
- The basic system uses a small pump, which has low operation and maintenance (O&M) costs. The pump is easily accessible for service or replacement.
- Although the design hydraulic loading rate is 10 gal/ft^2/day, it can handle surges of up to 49 gal/ft^2/day for several days with little effect on effluent quality.
- Removal rates for nitrogen are approximately 505. Effluent BOD and TSS are expected to be <30 mg/L. Fecal coliform removal is typically 99%.

They have the following disadvantages:

- Costs are typically higher than those of a standard septic system.
- Systems are sensitive to the temperature of the septic tank effluent entering the system. Insulation of the septic tank is recommended.
- More maintenance is required than a standard septic system due to mechanical and electrical components.
- Pumps and/or fans are used which must be maintained and periodically replaced.
- The denitrification unit periodically requires recharging with material like sawdust or leaves to serve as a carbon source for denitrification.
- The unit may need to be installed above ground depending on depth to groundwater.

AdvanTex® System

The AdvanTex® system is a textile filter technology. The main components are a control panel, a filter pod, a recirculating splitter valve, a pumping package, and a processing tank. The filter material consists of an engineered textile that has greater surface area than sand or gravel,

This document is in draft form. The contents, including any opinions, conclusions or recommendations contained in, or which may be implied from, this draft document must not be relied upon. GHD reserves the right, at any time, without notice, to modify or retract any part or all of the draft document. To the maximum extent permitted by law, GHD disclaims any responsibility or liability arising from or in connection with this draft document.

allowing greater volumes of wastewater treatment in less space. After initial settling in the first compartment of the processing tank, effluent is pumped to the filter pod. As effluent percolates through the filter media, a biological film develops, providing additional BOD, TSS, and nitrogen removal.

The splitter valve directs a portion of the flow to the effluent discharge and a portion back to the processing tank. The splitter valve also maintains a minimum water level in the processing tank; therefore, all of the treated effluent is recycled back to the processing tank when there is no influent. Effluent discharge is controlled by a timer, which discharges in "microdoses." The microdoses occur for relatively short intervals, typically 72 times per day.

AdvanTex® systems have the following advantages:

- The system can be installed within a small footprint.
- High quality effluent (5 mg/L BOD and TSS) can be used for drip irrigation.
- Septage pumping requirements are similar to those of a standard septic system.
- No significant environmental or public acceptance concerns when they are properly sited and designed.
- The process operation is flexible, with the ability to adjust cycle times.
- The basic system uses a small pump, which has low operational and maintenance costs.

AdvanTex® systems have the following disadvantages:

- Costs are typically higher than those of a standard septic system.
- More maintenance is required than a standard septic system due to mechanical and electrical components.
- Pumps and/or fans are used, which must be maintained and periodically replaced.
- May require media replacement at a higher cost than a system with sand or gravel media.

DRAFT

NITREX® System

This system is a denitrification filter unit that can be added to the end of an I/A system. The system requires a nitrified effluent for the unit to work; therefore a treatment process beyond a normal septic system is required prior to this system. The filter media is contained in a tank and is a gravity flow-through system. The media is comprised of wood chips and cellulose.

The NITREX® system has the following advantages:

- Better treatment can be attained and the leaching size can be reduced.
- Septage pumping requirements are similar to those of a standard septic system.
- No significant environmental or public acceptance concerns when they are properly sited and designed.
- Does not require pumping.
- Excellent nitrogen removal is possible (greater than 50%) when the upstream treatment process has converted all the organic and ammonia nitrogen to nitrate nitrogen.

The NITREX® system the following disadvantages:

- Costs are typically higher than those of a standard septic system.

This document is in draft form. The contents, including any opinions, conclusions or recommendations contained in, or which may be implied from, this draft document must not be relied upon. GHD reserves the right, at any time, without notice, to modify or retract any part or all of the draft document. To the maximum extent permitted by law, GHD disclaims any responsibility or liability arising from or in connection with this draft document.

- Requires a very effective nitrification process as an earlier treatment step to provide a nitrified effluent to the system.
- Media life is unknown and is expected to need replacement in 10 to 20 years.

Norweco Singulair

The Norweco Singulair system is a type of extended aeration system. The treatment process is contained within a three-chambered tank. The first chamber provides solids settling, the second chamber is the aerobic zone where the wastewater is aerated to promote BOD removal and nitrification, and the third chamber is the final settling chamber. This chamber is equipped with a filtration unit to aid in clarification prior to effluent disposal. The system is followed by a recirculation chamber to pump 10 to 20% of the flow back to the first chamber for nitrogen recycle.

The Singulair system has the following advantages:

- Septage pumping requirements are similar to those of a standard septic system.
- No significant environmental or public acceptance concerns when they are properly sited and designed.
- Can achieve better treatment than a Title 5 system and the leaching size can be reduced

The Singulair system has the following disadvantages:

- Costs are typically higher than those of a standard septic system.
- More maintenance is required than a standard septic system due to mechanical and electrical components.
- Pumps are used which must be maintained and periodically replaced.

SeptiTech® System

This system is a fixed-film-type system. The first two tanks or chambers of the system provide solids settling and the anoxic zone for denitrification. The second chamber contains trickling filter media and wastewater is recirculated within this chamber for treatment. Flow is also recirculated back to the anoxic zone to promote denitrification.

The SeptiTech® system has the following advantages:

- Better treatment than a standard septic system can be attained and the leaching size can be reduced.
- Septage pumping requirements are similar to those of a standard septic system.
- No significant environmental or public acceptance concerns when they are properly sited and designed.

It has the following disadvantages:

- Costs are typically higher than those of a standard septic system.
- More maintenance is required than a standard septic system due to mechanical and electrical components.
- Pumps are used which must be maintained and periodically replaced.

DRAFT

This document is in draft form. The contents, including any opinions, conclusions or recommendations contained in, or which may be implied from, this draft document must not be relied upon. GHD reserves the right, at any time, without notice, to modify or retract any part or all of the draft document. To the maximum extent permitted by law, GHD disclaims any responsibility or liability arising from or in connection with this draft document.

4.3.3 Non-Discharge Systems

There are several non-discharge systems that may be appropriate for specific areas of Uxbridge as identified below.

Tight Tanks

Tight tanks are non-discharge systems that collect and store the wastewater until it can be removed by a septage hauler. All of the wastewater generated by the household or business goes directly into the tight tank. The storage tank typically has a level indicator with an alarm. A signal is transmitted when the liquid level reaches a specified height. When the tank is full, a septage hauler empties the tank and transports the contents to a treatment facility.

Tight tanks have the following advantages:

- Simple technology.
- No significant environmental concerns when they are properly sited and designed.
- Require less land area than a septic system (no leaching area).
- Water use is discouraged because most water used must be transported and disposed off-site at a high cost.

They have the following disadvantages:

- MassDEP does not consider tight tanks an adequate long-term solution.
- High operational costs due to frequent pumping and disposal.
- Potential for frequent pump-truck traffic and odors that occur during pumping.
- Wastewater treatment and disposal issues are transferred to another location.

Waterless Toilets

Water consumption, wastewater flow, and pollutant loading can be reduced using waterless toilets. Waterless toilet systems operate by separating black wastewater and gray wastewater. Black wastewater is toilet waste and gray wastewater is generated from non-sanitary sources, such as washing clothes and dishes, and bathtub and shower use. Black wastewater is treated in the waterless toilet unit, and gray wastewater is discharged to a septic system with potential size reductions. The two most common wastewater toilet systems are composting toilets and incinerating toilets.

Composting toilets recirculate the black wastewater over remaining solids to promote a natural decomposition process. Incinerating toilets burn black wastewater and generate a small quantity of ash and gas. Composted material and ash are periodically removed from the respective systems, and air filters and exhaust units are used to minimize odors. Public acceptance of waterless toilet systems is often low due to the composting, incinerating, and handling of human waste within living spaces. A potential use of waterless toilets is in public restrooms and convenience stations or at remote locations.

Waterless toilets have the following advantages:

- Wastewater flows and loads are reduced if properly designed and installed.
- Water consumption is significantly reduced.
- Minimal environmental concerns occur when properly sited and designed.

DRAFT

This document is in draft form. The contents, including any opinions, conclusions or recommendations contained in, or which may be implied from, this draft document must not be relied upon. GHD reserves the right, at any time, without notice, to modify or retract any part or all of the draft document. To the maximum extent permitted by law, GHD disclaims any responsibility or liability arising from or in connection with this draft document.

- Composting toilets require minimal energy use.
- Size of standard septic system may be reduced to treat only gray wastewater.
- Routine maintenance is minimal and requires no special training.

Waterless toilets have the following disadvantages:

- Public acceptance is generally low.
- Incinerating toilets generally have high energy requirements.
- Handling of composting toilet contents can be objectionable.
- Incineration units are likely to generate odors if not vented properly.
- Not well suited to high seasonal peak loading.

4.4 Cluster Treatment Systems

Cluster treatment systems are systems which fall between individual on-site systems and larger municipal (satellite or centralized) facilities designed to serve large areas of a town. These systems are typically designed to treat and recharge wastewater generated (and collected by sewer systems) within individual neighborhoods. The main difference between cluster systems and centralized wastewater treatment facilities is the location of the treatment and treated water recharge.

Cluster systems can range in size from serving small groups of homes up to a group of 30 homes. Cluster treatment systems may utilize any one of the on-site technologies described previously in this chapter, or could be served by small applications of wastewater treatment systems (as described in Chapter 5 used for flows over 10,000 gpd). Because cluster systems are designed to handle "clusters" of properties, they require a collection system to transport the wastewater from the properties to the treatment facility. The collection system may be any one of the collection systems described in detail in Chapter 7.

These systems are regulated by Title 5 regulations and do not require a groundwater discharge permit. Treatment and recharge sites would need to be located for these systems.

4.5 Screening of Alternative Decentralized Technologies

Table 4-1 summarizes key information for each technology alternative with respect to the screening criteria discussed in Chapter 2. All of the wastewater treatment technologies require review and approval by MassDEP and/or the local Board of Health. Table 4-1 includes information on technologies currently approved by MassDEP. Additional technologies may be approved in the future.

As documented in the Draft Needs Assessment Report, conventional Title 5 systems are expected to continue to provide adequate treatment for the portion of the Town that is not connected to the centralized collection system. The remainder of the technologies summarized in this chapter should be considered only if, during future development in the Town, individual sites are found to be unsuitable for on-site wastewater disposal (site constrained) through a conventional Title 5 system.

DRAFT

This document is in draft form. The contents, including any opinions, conclusions or recommendations contained in, or which may be implied from, this draft document must not be relied upon. GHD reserves the right, at any time, without notice, to modify or retract any part or all of the draft document. To the maximum extent permitted by law, GHD disclaims any responsibility or liability arising from or in connection with this draft document.

5. Alternatives for Centralized and Satellite Wastewater Treatment Facilities and Sites

5.1 Introduction

The purpose of this chapter is to identify technologies and sites that can be used by the Town of Uxbridge for wastewater treatment facilities. This chapter will review options for the centralized wastewater treatment facility as well as options for satellite wastewater treatment facilities, as satellite facilities may be a wastewater management option in the future for a yet to be identified need. Any recommended technologies will be considered for further detailed evaluation as part of the next phase of the Project.

As outlined in the Draft Needs Assessment the majority of the equipment at the Uxbridge WWTF is well past its useful life and in need of replacement. Additionally several of the existing processes need to be upgraded in order to meet the new NPDES permit (Permit No. MA012440), issued in 2013. This chapter will provide a process by process discussion of the alternatives for upgrading the existing facility.

Currently, the majority of the properties in Uxbridge that are not connected to the centralized system utilize conventional Title 5 systems for on-site wastewater disposal. Since the Draft Needs Assessment did not identify any concentrated, problematic areas for on-site wastewater disposal the most cost-effective option is for these areas to continue using on-site wastewater disposal systems or to consider expanding the existing collection system to service properties that are in close proximity to the existing system. However, in the event of a future need, due to remote concentrated development or another future issue, options for satellite facilities will be reviewed.

Wastewater treatment alternatives are divided into the following groups:

1. Alternatives for treatment system expansion and upgrade at the existing centralized Uxbridge WWTF (Section 5.5):
    a. Preliminary treatment
    b. Primary treatment
    c. Secondary/advanced treatment technologies
    d. Disinfection
    e. Post Aeration
    f. Support Facilities
    g. Residuals Management
    h. Odor Control
    i. Pump Stations
2. Away from the Centralized Treatment Facility (Satellite treatment facilities) (Section 6.6)
    a. Suspended Growth Biological Treatment

DRAFT

This document is in draft form. The contents, including any opinions, conclusions or recommendations contained in, or which may be implied from, this draft document must not be relied upon. GHD reserves the right, at any time, without notice, to modify or retract any part or all of the draft document. To the maximum extent permitted by law, GHD disclaims any responsibility or liability arising from or in connection with this draft document.

b. Attached Growth (Fixed Film) Biological Wastewater Treatment

- Wood chip filters
- Amphidrome System®

c. Plant and Biological Systems

- Hydroponic systems
- Constructed wetlands
- Solar Aquatics®
- Lagoons

Each group of alternatives is presented and screened in a separate section of this chapter. Treated water recharge alternatives are discussed in Chapter 6.

5.2 No Action Alternative

In the No Action Alternative the Uxbridge WWTF would continue to operate with no improvements to the facility. The cost of operating and maintaining mechanical and electrical equipment, which is already well past its useful life, would continue to escalate and become more difficult as equipment becomes obsolete and replacement parts harder to find.

The Uxbridge WWTF was not designed to provide the level of treatment required by its new NPDES permit, and would violate the permit conditions under the "No Action" alternative. Permit non-compliance would cause or contribute to degradation of water quality conditions in the Blackstone River and would lead to legal enforcement actions by MassDEP, USEPA, and environmental groups.

The "No Action" alternative is not recommended for further consideration.

DRAFT

5.3 "Fix It First" Alternative

As discussed in Chapter 2 the "Fix it First" alternative will be considered for each existing wastewater treatment process in order to reuse as much existing infrastructure as practical. For some processes the "Fix it First" alternative is to replace aging existing equipment in kind. For processes that are not capable of meeting the new discharge permit limits (such as the secondary treatment process) the "Fix it First" alternative looks at reusing as much of the existing infrastructure as possible—for example reusing existing tankage for a new treatment process.

5.4 Wastewater Treatment System Components

5.4.1 Introduction

Both centralized and satellite treatment facilities include the following system components: (1) preliminary treatment; (2) primary treatment; (3) secondary/advanced treatment; (4) effluent disinfection and (5) post aeration. These system components are described below, and treatment alternatives are described in detail and screened. These system components are also illustrated in Figure 5-1.

This document is in draft form. The contents, including any opinions, conclusions or recommendations contained in, or which may be implied from, this draft document must not be relied upon. GHD reserves the right, at any time, without notice, to modify or retract any part or all of the draft document. To the maximum extent permitted by law, GHD disclaims any responsibility or liability arising from or in connection with this draft document.

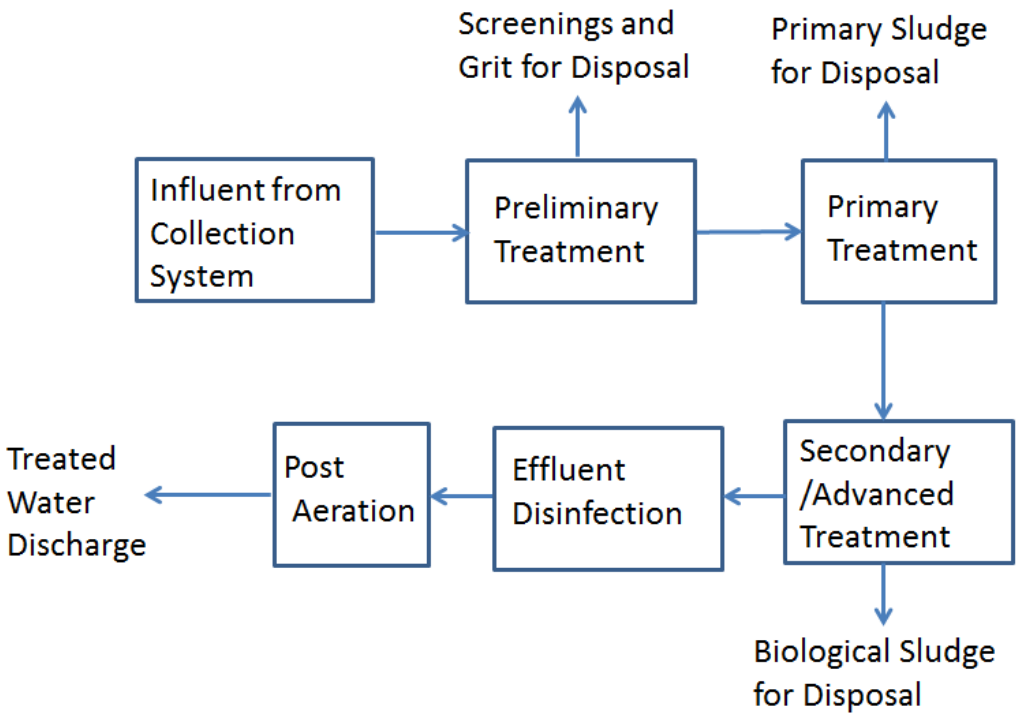

Figure 5-1 Wastewater Treatment System Components

DRAFT

5.4.2 Preliminary Treatment

Preliminary treatment is designed to remove large and abrasive objects and is usually the first process of a treatment facility. The removal of these objects prevents damage to treatment equipment such as pumps, valves, and pipelines.

Bar screens are used to remove large objects and the material removed is referred to as “screenings”. Grit removal facilities are utilized to remove sand and other abrasive materials from the wastewater to prevent excessive wear on moving equipment and minimize heavy deposits in pipelines and channels.

5.4.3 Primary Treatment

Primary treatment is a process to remove settleable solids from the wastewater flow. The solids are removed by gravity settling and can be collected using mechanical equipment or by periodically pumping the tank. Primary treatment methods often include primary clarification for larger facilities and large septic tanks for smaller facilities.

Primary clarification involves the use of circular or rectangular tanks with mechanical equipment for collection and removal of solids and scum. As wastewater flows through the tank, solids settle to the bottom of the tank and the scum floats to the top of the tank; both are then collected and removed by mechanical equipment.

5.4.4 Secondary/Advanced Wastewater Treatment Systems

Secondary treatment processes are designed to remove dissolved and suspended solids from wastewater, reducing the BOD and TSS concentrations. Advanced treatment processes typically remove nutrients such as nitrogen and phosphorus. The most common and typically least

This document is in draft form. The contents, including any opinions, conclusions or recommendations contained in, or which may be implied from, this draft document must not be relied upon. GHD reserves the right, at any time, without notice, to modify or retract any part or all of the draft document. To the maximum extent permitted by law, GHD disclaims any responsibility or liability arising from or in connection with this draft document.

expensive secondary and advanced treatment processes are biological processes. This section focuses on biological processes because they are the most used and efficient processes for wastewater treatment. This section also discusses physical and chemical processes that can enhance the performance of the biological processes.

Biological treatment of wastewater utilizes microorganisms to transform solids and organic matter into biological cell mass, carbon dioxide, and nitrogen gas. Biological processes provide an environment for microbial growth using nutrients, BOD, and TSS in the wastewater as a food source. Microorganisms are removed from the wastewater as sludge (also called bio-solids); and carbon dioxide and nitrogen gas are released to the atmosphere.

Biological processes are classified as aerobic, anoxic, or anaerobic processes. Aerobic processes are those which occur only in the presence of oxygen; anoxic processes occur when there is minimal oxygen but sufficient nitrate-nitrogen for biological respiration; and anaerobic processes occur when there is no oxygen or nitrate present.

Biological processes are also classified by the physical configuration used for promoting microbial growth. The following sections provide a brief description of the three major types of biological processes.

Suspended Growth Processes

Suspended growth processes are biological processes which maintain a concentrated supply of microorganisms suspended in the wastewater. The mixture of microorganisms, organic solids, and water are collectively referred to as mixed liquor suspended solids (MLSS). Decomposition of solids and organic matter is achieved by combining wastewater and MLSS in a contact tank. The microorganisms grow and consume the solids and organic material. The microorganisms multiply and are later separated from the treated water to be reused in the process. Excess biological growth is removed from the process as sludge. The microorganisms are typically separated from the treated water in settling tanks or through various separation processes.

DRAFT

Attached Growth (Fixed-Film) Processes

Attached growth processes (also known as fixed-film processes) utilize an inert medium of plastic, stone, sand, or other material on which the microorganisms grow and multiply. The wastewater is brought in contact with the microorganisms (also called biomass) on the medium, and the biomass consumes the solids and organic material to produce more biomass. Attached growth processes include trickling filters, rotating biological contactors (RBCs), aerated biological filters, packed beds, fluidized beds, and moving bed biofilm reactors (MBBR). These process names identify the configuration of the support medium.

Plant and Biological Treatment Systems

Plant and biological treatment systems utilize plant materials as well as microbiological populations for wastewater treatment. They have not been widely applied for nitrogen removal and are not as well defined in terms of predicted performance and design criteria as the more conventional systems. They typically have large land area requirements. These treatment systems include hydroponic systems (like Solar Aquatics) and constructed wetlands. These systems rely on naturally occurring plants, aquatic life, and sunlight to remove contaminants.

5.4.5 Effluent Disinfection

Effluent disinfection systems reduce the concentration of harmful pathogens, such as viruses, bacteria, protozoa, cysts or parasites that are discharged from a treatment facility. Three widely

This document is in draft form. The contents, including any opinions, conclusions or recommendations contained in, or which may be implied from, this draft document must not be relied upon. GHD reserves the right, at any time, without notice, to modify or retract any part or all of the draft document. To the maximum extent permitted by law, GHD disclaims any responsibility or liability arising from or in connection with this draft document.

used technologies for disinfection are chlorination, ultraviolet (UV) disinfection and treatment with ozone.

5.4.6 Post Aeration

Permits for effluent discharge to a river or stream typically require a high effluent dissolved oxygen level. Post aeration processes are designed to increase the dissolved oxygen in the effluent wastewater stream before final discharge. Post aeration is usually the final process before the effluent is discharged to the receiving water body. Oxygen can be introduced into the effluent either through turbulence or mechanical aeration.

5.5 Centralized Treatment Alternatives

Technologies considered to replace aging equipment at the Uxbridge WWTF and to upgrade the facility in order to meet its NPDES permit are described in the section below. The discussion for each process outlines the facilities existing infrastructure, alternatives considered and a screening of alternatives to determine which options will be retained for further evaluation

5.5.1 Preliminary Treatment Technologies

Existing Infrastructure

The Uxbridge WWTF preliminary treatment system currently has an aerated grit chamber followed by a grinder installed in the main channel and a coarse bar screen in the bypass channel. Although the existing system meets TR-16 standards both the grinder and the aerated grit chamber equipment are well past their useful life.

"Fix it First" Alternative

1. **Grit Removal**

Grit removal technologies are typically designed to provide for the removal of at least 95% of particles with a specific gravity of 2.65 that pass through a 65 or larger screen mesh. While several different grit removal technologies exist, the most cost-effective alternative is the "Fix it First" alternative, in which the existing aging equipment is replaced in kind.

2. **Grinding**

The facility currently uses a grinder for preliminary treatment. Grinders are no longer the industry standard and should only be considered when screening is not a viable option. The technology is also not appropriate for facilities with sensitive downstream processes, such as filters (which are likely to be needed as a result of the new NPDES permit). Due to these factors grinding is not considered further in this evaluation.

Screening

TR-16 recommends that fine-screen screening devices be installed to protect downstream pumps and treatment facilities. Installation of fine screens in the two existing preliminary treatment channels will be considered for further evaluation.

Removal of Disposable Wipes

The facility faces an operational challenge from the large amount of disposable wipes entering the WWTF. The wipes clog the Main Pump Station pumps, Main Pump Station check valves, and the aerated grit equipment.

DRAFT

This document is in draft form. The contents, including any opinions, conclusions or recommendations contained in, or which may be implied from, this draft document must not be relied upon. GHD reserves the right, at any time, without notice, to modify or retract any part or all of the draft document. To the maximum extent permitted by law, GHD disclaims any responsibility or liability arising from or in connection with this draft document.

The following alternatives could be considered for managing the disposable wipes:

- Installation of a fine screen at the location where the raw sewage enters the raw sewage wet well in the Main Pump Station. Due to the depth of the Main Pump Station installation of a fine screen is not considered a practical solution. The operators would face maintenance challenges, the screen would lack the protection of a coarse bar rack and providing a backup would be very costly. As a result, this option was not considered for further evaluation.
- Installation of chopper pumps at the Main Pump Station. Previous experience has shown that when disposable wipes are chopped they are likely to make it past a downstream fine screen and then possibly make their way to sensitive, downstream processes. Since it would be unacceptable for these wipes to make their way to the sensitive downstream processes that are needed to meet the facility's new permit limits, this option was not considered for further evaluation.
- Upgrading Main Pump Station pumps to pass the disposable wipes and installation of a fine screen at the preliminary treatment system. Several manufacturers market impellers capable of passing disposable wipes. The wipes would pass through the Main Pump Station and be removed at the head-works. The headworks could be reconfigured so that flow passes through the fine screen prior to the aerated grit chamber, to minimize clogging potential in the aerated grit chamber. This option is retained for further evaluation.

Screening of Preliminary Treatment Alternatives

Fine screening is recommended as the preferred preliminary treatment alternative. Grinding is not recommended for further study since it is no longer the standard in the industry and not recommended for facilities with sensitive downstream processes. The "Fix it First" alternative of replacing existing aerated grit equipment in kind, upgrading the existing infrastructure with the construction of fine screens and reconfiguring the influent channel so that flow passes through the fine screens prior to grit removal is recommended for the preliminary treatment system.

DRAFT

5.5.2 Primary Treatment Technologies

The purpose of this section is to identify and screen alternatives that could be used to achieve solids separation prior to the secondary treatment process.

Existing Infrastructure

The Uxbridge WWTF has three primary settling basins with chain and flight mechanisms mounted on parallel chains. The basins are properly sized for future flow conditions, however all of the mechanical components are well past their useful life.

"Fix it First" Alternative

The primary settling basins are properly sized for future flow conditions, based on TR-16 criteria, and can be reused. The mechanical equipment is well past its useful life and needs to be replaced in kind. The "Fix-it First" alternative is the most cost-effective option for primary treatment.

Screening of Primary Treatment Technologies

The "Fix it First" Alternative is recommended for further study.

This document is in draft form. The contents, including any opinions, conclusions or recommendations contained in, or which may be implied from, this draft document must not be relied upon. GHD reserves the right, at any time, without notice, to modify or retract any part or all of the draft document. To the maximum extent permitted by law, GHD disclaims any responsibility or liability arising from or in connection with this draft document.

5.5.3 Secondary/Advanced Treatment Technologies

Existing Infrastructure

The facility has three aeration tanks. The tanks were originally designed to only provide BOD removal at the design flow of the facility; however the operators have modified the operation to provide some nitrogen removal. The aeration tanks are currently configured to operate with minimal air in the first tank, full aeration in the second tank, and low air in the third tank to remove some nitrogen, recover alkalinity, and decrease energy usage. The existing tanks are described in further detail in Chapter 5 of the Needs Assessment Report. The facility currently uses chemical precipitation for phosphorus removal.

"Fix it First" Alternative

In their current configuration the existing aeration tanks do not have enough volume to provide secondary treatment to meet the effluent limits of the 2013 permit. Additionally all of the mechanical equipment is well past its useful life. Though the current process is insufficient for future needs, the concrete tanks are in good condition and could be either reused or expanded to house a new process.

Nutrient Removal Processes

Phosphorus in wastewater from residential, commercial, institutional, and minor industrial sources exists principally in the form of soluble—or dissolved—phosphorus. As a result, significant phosphorus removal depends first and foremost on the ability to convert soluble/dissolved phosphorus to a particulate form for subsequent removal either by settling or by filtration.

Soluble/dissolved phosphorus can be converted to a particulate form by biological or chemical treatment. Because phosphorus is an essential nutrient for biological growth, biological treatment involves the incorporation of soluble phosphorus into biomass during wastewater treatment. The phosphorus content of biomass typically varies over a range of approximately 1.5 to 2% (dry weight basis).

The amount of phosphorus incorporated into biomass, however, can be increased significantly by incorporating anaerobic zones into biological wastewater treatment systems. By sequentially subjecting biological microorganisms to first anaerobic and then aerobic conditions the phosphorus content of biomass can be increased to 3 to 6% (dry weight basis). With proper control of operating conditions and with effective settling these systems are generally able to reduce the concentration of phosphorus in wastewater to the range of 0.5 to 2.0 milligrams per liter.

In addition to these, biological phosphorus removal can also be achieved by incorporating an anaerobic stage in the design and operation of sequencing batch reactors and by primary sludge fermentation, which involves recycling biological sludge solids to primary settling tanks.

Nitrogen removal from wastewater is an established technology, but it requires larger process tanks and skilled operation. Nitrogen removal includes the two steps of nitrification and denitrification. Nitrification converts ammonia-nitrogen to nitrate-nitrogen, and denitrification converts nitrate-nitrogen to nitrogen gas which is released to the atmosphere.

Biological Nitrogen Removal (BNR) processes have typically been designed to meet the drinking water standard of 10 mg/L total nitrogen, and can be designed to exceed this performance. As a result (when they are operated well), they will provide a treated water with an average total nitrogen concentration of 5 to 7 mg/L.

DRAFT

This document is in draft form. The contents, including any opinions, conclusions or recommendations contained in, or which may be implied from, this draft document must not be relied upon. GHD reserves the right, at any time, without notice, to modify or retract any part or all of the draft document. To the maximum extent permitted by law, GHD disclaims any responsibility or liability arising from or in connection with this draft document.

1. **Physical/Chemical Wastewater Treatment Processes**

Physical/chemical treatment is commonly used for phosphorus removal but has received limited application for nitrogen removal municipal wastewaters because biological processes tend to be more efficient and cost-effective for this nutrient. Although not common, physical/chemical processes for nitrogen removal are included in the review of physical chemical secondary processes in an effort to be complete in our identification of treatment processes.

a. **Chemical Addition for Phosphorus Removal.** Chemical treatment for phosphorus removal involves adding an iron or aluminum salt solution to precipitate phosphorus. Lime addition has also been used in the past, but has largely fallen out of favor due to the significant amounts of chemical sludge produced and operational difficulties associated with the handling of lime. Current practice for municipal wastewater treatment typically involves the addition of ferric chloride, ferrous chloride, ferrous sulfate, aluminum sulfate (alum), polyaluminum chloride (PAC), or sodium aluminate. Chemical treatment for phosphorus removal is currently used at the Uxbridge WWTF as shown in Figure 5-2. The operators of the facility recently switched from using PAC to alum.

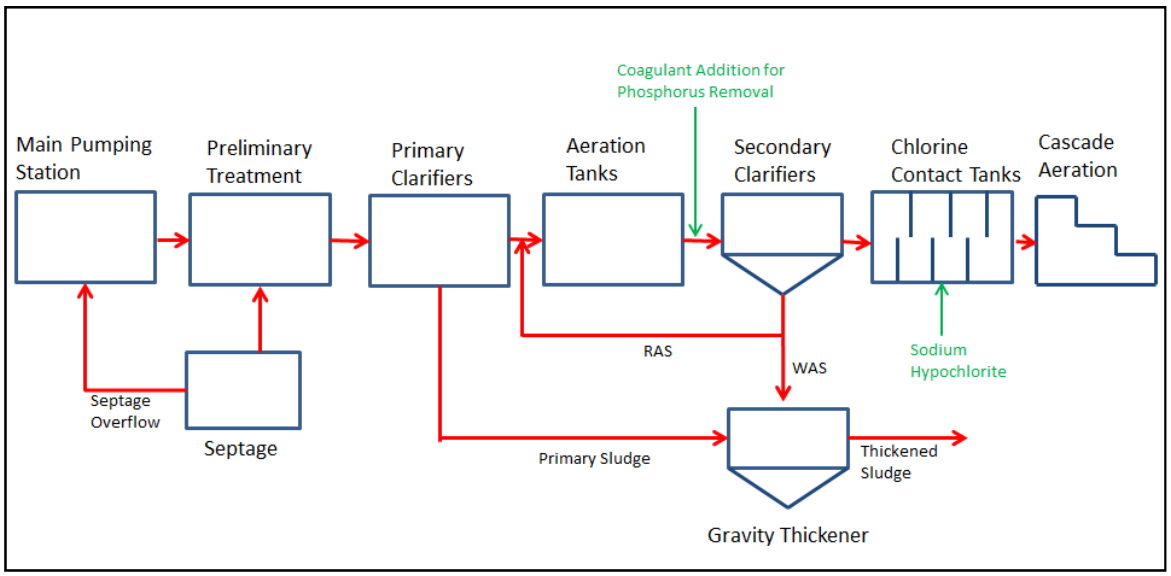

Figure 5-2 Uxbrige WWTF Chemical Phosphorus Addition

b. **Filtration for Phosphorus Removal.** With effective secondary settling, chemical addition is typically able to reduce the concentration of phosphorus in wastewater to the range of 0.5 to 1.0 milligrams per liter. For consistent and reliable long-term compliance with effluent phosphorus limits below 0.5 milligrams per liter, effluent filtration is generally required. This is due to the phosphorus content of suspended and colloidal solids normally present in secondary clarifier effluent. With the exception of facilities that use high mixed liquor suspended solids concentration technologies such as MBRs or ballasted settling (i.e. BioMag process) for biological wastewater treatment, facilities that are required to meet effluent phosphorus limits less than 0.5 mg/L typically use a second dose point for chemical feed to the filter influent. In addition, a chemical flocculation tank is often used to promote development of a chemical floc that can be effectively removed by the effluent filter system.

In order to achieve consistent and reliable long-term compliance with the new effluent phosphorus limit of 0.2 milligrams per liter required for the period of April 1 through October

This document is in draft form. The contents, including any opinions, conclusions or recommendations contained in, or which may be implied from, this draft document must not be relied upon. GHD reserves the right, at any time, without notice, to modify or retract any part or all of the draft document. To the maximum extent permitted by law, GHD disclaims any responsibility or liability arising from or in connection with this draft document.

31, tertiary effluent filtration will be required. A typical setup for phosphorus removal with tertiary effluent filtration is shown in Figure 5-3.

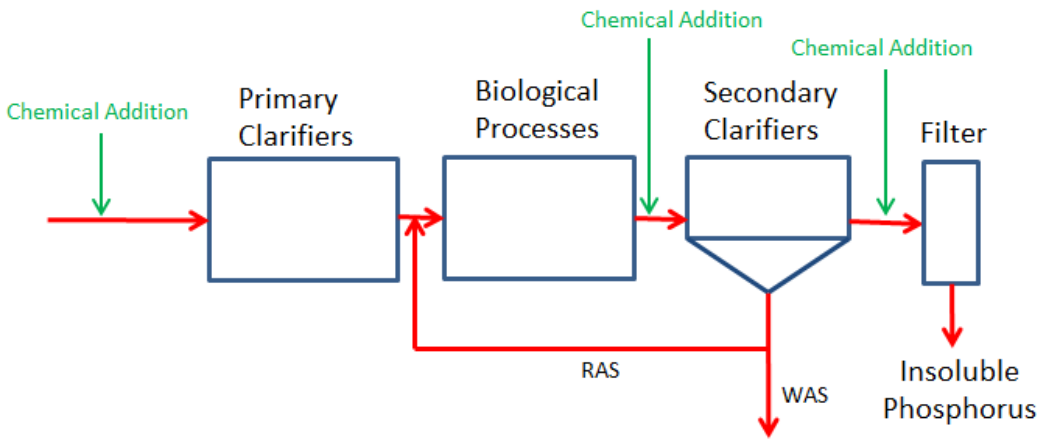

Figure 5-3 Typical Setup for Phosphorus Removal with Tertiary Filter

A number of different types of effluent filters are available, including various types of sand filters and cloth media/disc filters. For the degree of phosphorus removal required for Uxbridge, sand filters would need to be of the deep-bed continuous-backwash type. The topography of the Uxbridge WWTF site appears more conducive to the use of a cloth media type filter. These filters can be furnished as package steel units or for installation in concrete tanks.

c. **Ion Exchange.** Ion exchange is an ion-specific process that can be used to remove specific nitrogen, carbon, or other contaminants and involves the use of columns or beds containing resins that will exchange one ion for another. The column is operated until the resin is exhausted and breakthrough occurs, at which time the bed must be regenerated with a concentrated alkaline solution to remove the ions. The spent regenerant must then be treated and disposed of, or processed for recovery and reuse. To avoid plugging of the resin, influent pretreatment and filtration must be provided ahead of the ion exchange column.

Full-scale applications have shown that the process is labor-intensive and costly, requires frequent maintenance, and presents safety and corrosion concerns due to the handling of caustic acid and salt solutions. This technology is not considered further.

d. **Ammonia Stripping.** Ammonia stripping and related processes—such as steam stripping and ammonia stripping at elevated temperatures—consist of adding lime or other alkaline compounds to raise the pH of the wastewater stream to a high level and passing the stream through a tower with countercurrent air flow to strip out the ammonia gas. The stripped ammonia is then released to the atmosphere, which can create odor problems or may not be considered environmentally acceptable. The air stream must then be passed through an air scrubber to recover the ammonia in the form of ammonium sulfate. Ammonia stripping does not remove organic nitrogen, nitrites, or nitrates, and thus would not be able to consistently achieve the expected nitrogen removal limits without other processes. Ammonia stripping is highly temperature-dependent and more suited to warm climates; stripping efficiency is greatly reduced at cold temperatures. Full-scale applications have encountered serious scaling problems in the towers. Ammonia stripping and related processes are more suited to

DRAFT

This document is in draft form. The contents, including any opinions, conclusions or recommendations contained in, or which may be implied from, this draft document must not be relied upon. GHD reserves the right, at any time, without notice, to modify or retract any part or all of the draft document. To the maximum extent permitted by law, GHD disclaims any responsibility or liability arising from or in connection with this draft document.

industrial applications with low volume, high-strength ammonia streams, or specific applications such as digester supernatant streams. Chemical dosages are dependent on the volume of flow and the ammonia concentrations; therefore, this process becomes more cost-effective at increased ammonia concentrations. This technology is not considered further.

e. **Breakpoint Chlorination.** Breakpoint chlorination involves the dosing of wastewater with high concentrations of chlorine to convert ammonium-nitrogen to other forms. Organic nitrogen and nitrates are not removed by breakpoint chlorination. It would be difficult to meet total nitrogen limits using this process. Many other reactions occur and dissolved solids are generated. Dechlorination is required due to the large dosages of chlorine required to achieve breakpoint. This technology is not considered further.

2. **Suspended Growth Biological Wastewater Treatment**

Suspended growth biological wastewater treatment systems for nitrogen removal have been widely investigated, developed, and implemented over the last four decades. As a variation of the activated sludge process, suspended growth systems provide additional tankage volume for 1) longer solids retention times for nitrification and 2) anoxic conditions for denitrification. A variety of systems are available, including single-sludge and multi-sludge systems. Within the single-sludge category, further process classifications can be defined, such as:

- Oxidation ditches.
- Multi-stage processes for nitrogen and phosphorus removal.
- Multi-phase/cyclical aeration.
- Sequencing batch reactors (SBRs).

Some systems have been developed to meet more stringent effluent limitations for nitrogen by providing multiple anoxic zones, and some system have been developed to remove both phosphorus and nitrogen with an emphasis on optimizing phosphorus removal.

Consistent and effective phosphorus removal depends on subsequent handling and disposal of the sludge that is generated. If the sludge is subsequently subjected to anaerobic conditions, such as may occur in a gravity sludge thickener or sludge storage tank, phosphorus will be released from the biomass and soluble phosphorus will be recycled to the plant influent in the sidestreams from sludge processing operations.

The applicability of various processes for Uxbridge is dependent on the level of treatment required and the degree of phosphorus removal to be provided.

Single-sludge systems combine carbonaceous BOD removal, nitrification, and denitrification in a single mixed liquor by providing aeration tankage with one set of clarifiers. Consequently, the activated sludge (single-sludge) returned to the aeration tankage from the clarifiers contains a concentrated mixture of microorganisms to accomplish all three processes. BOD removal and nitrification are accomplished simultaneously in the aerobic zones. Denitrification is accomplished in anoxic zones, which are mixed but not aerated to maintain a low dissolved oxygen level. Single or multiple anoxic zones or phases can be provided depending on the features of the various processes and/or level of treatment required. A higher level of nitrogen removal can be achieved with longer solids retention times (SRTs) and two or more anoxic zones, which result in increased aeration tankage. The major process variations or classifications of single-sludge systems include the following.

DRAFT

This document is in draft form. The contents, including any opinions, conclusions or recommendations contained in, or which may be implied from, this draft document must not be relied upon. GHD reserves the right, at any time, without notice, to modify or retract any part or all of the draft document. To the maximum extent permitted by law, GHD disclaims any responsibility or liability arising from or in connection with this draft document.

a. **Oxidation Ditches:** Figure 5-4 illustrates a generic process schematic for an oxidation ditch.

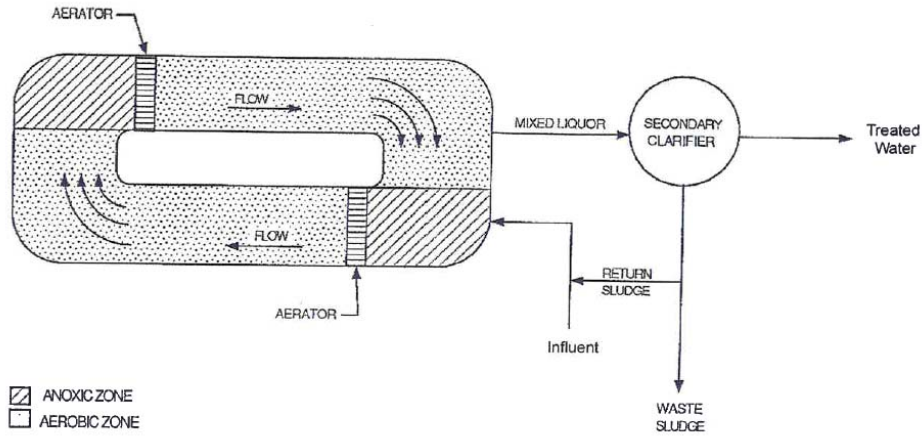

Figure 5-4 Oxidation Ditch

Oxidation ditches were developed to minimize operational requirements and maintenance. Ditches have large surface areas and one or more fixed aerators, located at strategic points to provide aeration and mixing as well as propulsion of flow around the tank. Wastewater flows in a continuous, circuitous path around the ditch with a high internal recycle rate to provide a complete mix flow regime. Ditches are designed to provide long solids retention time with no primary settling tank. Since aeration is provided at key points in the loop, aerobic conditions are created downstream of the aerator, while anoxic conditions generally exist upstream of the aerator. Consequently, nitrogen removal is achieved.

Various systems have been developed for nitrogen removal to take advantage of this inherent characteristic of oxidation ditches. Among these are the Carrousel, Orbal, and Bi-denitro processes. Pre- and post-anoxic tanks are often used with oxidation ditches to further promote nitrogen removal.

Oxidation ditches require larger land areas due to their large volume requirements.

Oxidation ditches have the following advantages:

- Requires minimal operator attention.
- Can achieve high level of nitrogen removal (3 to 5 mg/L when configured as a Bardenpho process and 5 to 7 mg/L configured as a MLE process).

They have the following disadvantages:

- Large land area is required for new tankage.
- Large capital costs associated with new tankage.

b. **Multi-Stage Single-Sludge Systems for Nitrogen and Phosphorus Removal:** Figure 5-5 represents a process schematic of a multiple-stage process developed to achieve both nitrogen and phosphorus removal.

DRAFT

This document is in draft form. The contents, including any opinions, conclusions or recommendations contained in, or which may be implied from, this draft document must not be relied upon. GHD reserves the right, at any time, without notice, to modify or retract any part or all of the draft document. To the maximum extent permitted by law, GHD disclaims any responsibility or liability arising from or in connection with this draft document.

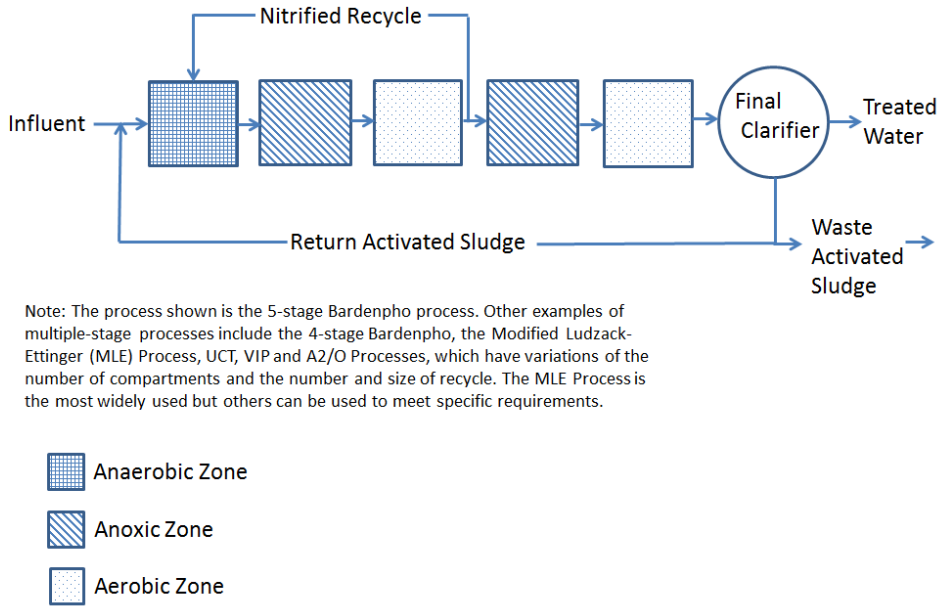

Figure 5-5 Multi-Stage Nitrogen and Phosphorus Removal Schematic

Influent wastewater or primary effluent first enters an anaerobic zone, followed by an anoxic zone and aerated zone. BOD removal and nitrification is achieved in the aerobic portion. Mixed liquor from the end of the aerobic zone is recycled to the head of the anoxic zone to achieve denitrification of nitrates (generated by the aerobic zone) to nitrogen gas. A high recycle rate is required (200 to 400% of influent flow) to return a sufficiently large fraction of nitrates to achieve good denitrification efficiency. Return activated sludge (RAS) is returned to the head of the anaerobic or anoxic zone. If returned to the anoxic zone, then another internal recycle is required to pump mixed liquor from the anoxic zone to the upstream anaerobic zone. The anaerobic zone is utilized to achieve phosphorus removal. Anaerobic conditions are used to stress the bacteria; phosphorus is released but later taken up by the bacteria during synthesis in higher proportions than normal synthesis, known as biological uptake or luxury uptake of phosphorus. A side benefit of the anaerobic zone is that it acts as a “selector” which has been shown to improve settleability characteristics of the sludge. Process variations have been developed including the A2/O process, the four-stage Bardenpho process, University of Cape Town (UCT) process, and the Virginia Initiative Plant (VIP).

The Bardenpho process, which utilizes dual anoxic zones, shown in Figure 5-6, is capable of achieving a total nitrogen limit of 3 to 5 mg/L on average, and 3 mg/L to meet ENR requirements when followed by filtration.

DRAFT

This document is in draft form. The contents, including any opinions, conclusions or recommendations contained in, or which may be implied from, this draft document must not be relied upon. GHD reserves the right, at any time, without notice, to modify or retract any part or all of the draft document. To the maximum extent permitted by law, GHD disclaims any responsibility or liability arising from or in connection with this draft document.

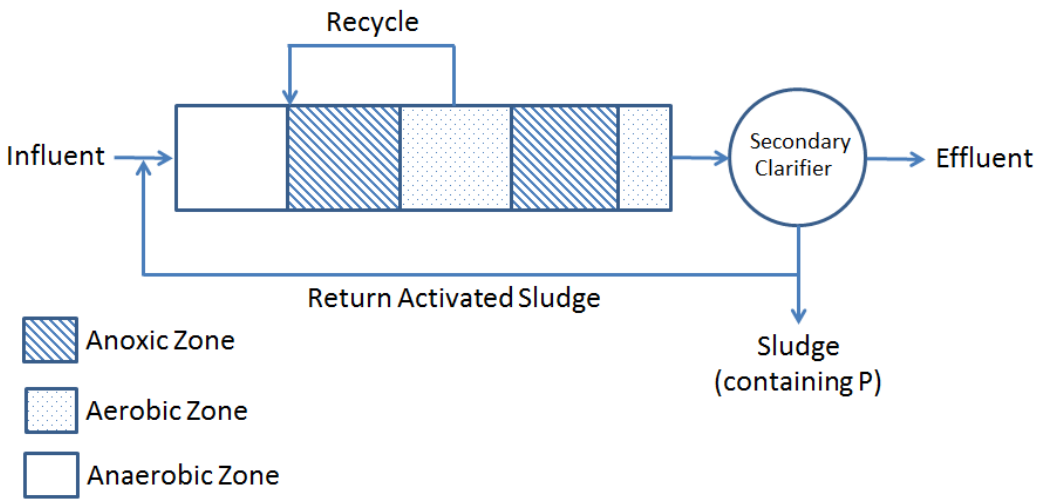

Figure 5-6 Modified Bardenpho Process (5-Stage)

The A2/O process, shown in Figure 5-7, has a single anoxic zone, can achieve 5 to 7 mg/L total nitrogen.

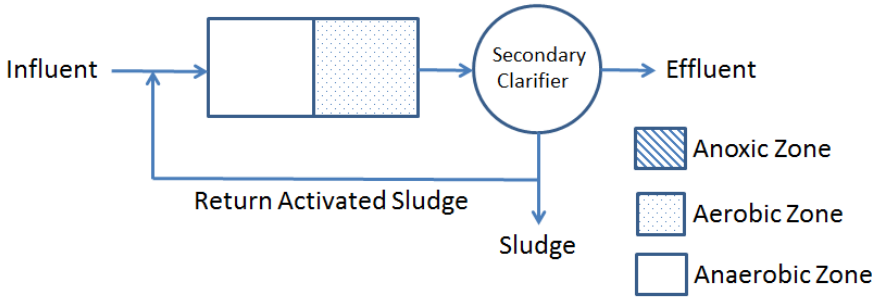

Figure 5-7 A2/O Process

The VIP (Figure 5-8) and UCT processes (Figure 5-9) are similar in that they were developed to optimize phosphorus removal. By providing multiple recycles for various zones, it is possible to achieve increased phosphorus removal.

This document is in draft form. The contents, including any opinions, conclusions or recommendations contained in, or which may be implied from, this draft document must not be relied upon. GHD reserves the right, at any time, without notice, to modify or retract any part or all of the draft document. To the maximum extent permitted by law, GHD disclaims any responsibility or liability arising from or in connection with this draft document.

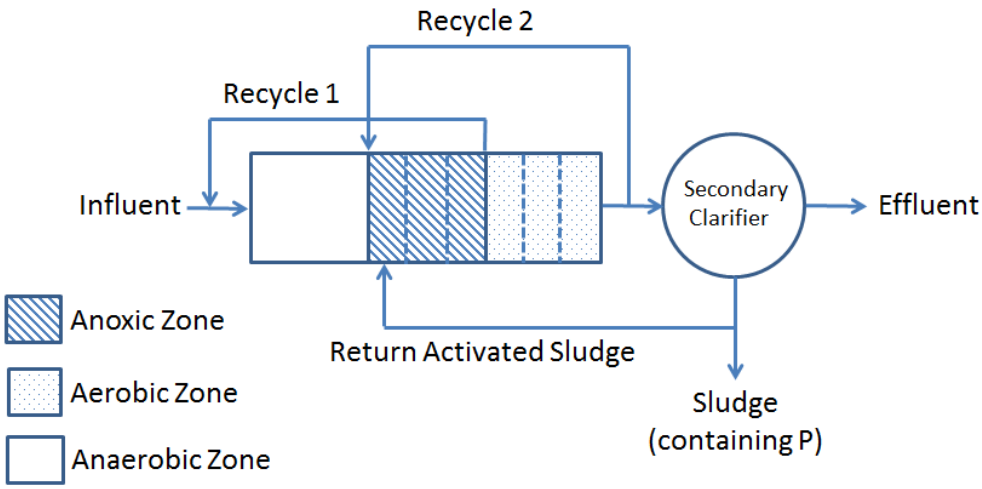

Figure 5-8 Virginia Initiative Plant (VIP) Process

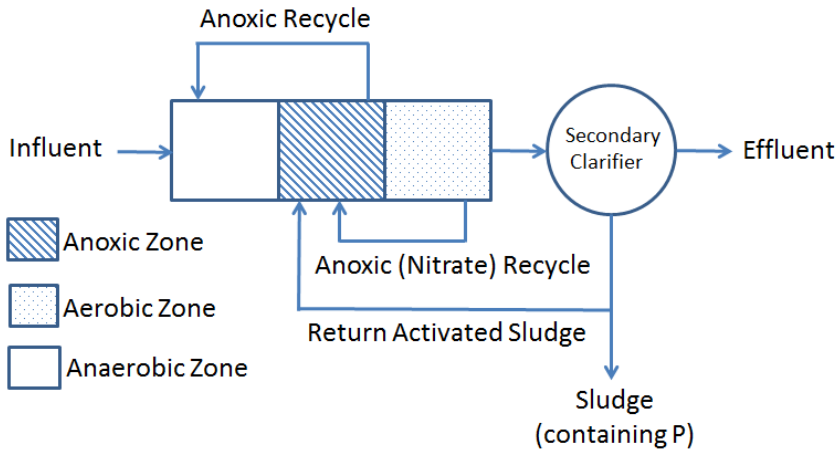

Figure 5-9 University of Cape Town (UCT Process)

Although the UCT and VIP processes have dual anoxic zones, they have not been capable of reliably meeting a total nitrogen limit of 3 to 5 mg/L on average.

Figure 5-10 illustrates the process schematic for two multi-stage nitrogen removal alternatives: the Modified Ludzack-Ettinger (MLE) process, which contains a single anoxic zone for pre-denitrification; and the four-stage Bardenpho process with two anoxic zones (one for pre-denitrification and the second for post-denitrification).

This document is in draft form. The contents, including any opinions, conclusions or recommendations contained in, or which may be implied from, this draft document must not be relied upon. GHD reserves the right, at any time, without notice, to modify or retract any part or all of the draft document. To the maximum extent permitted by law, GHD disclaims any responsibility or liability arising from or in connection with this draft document.

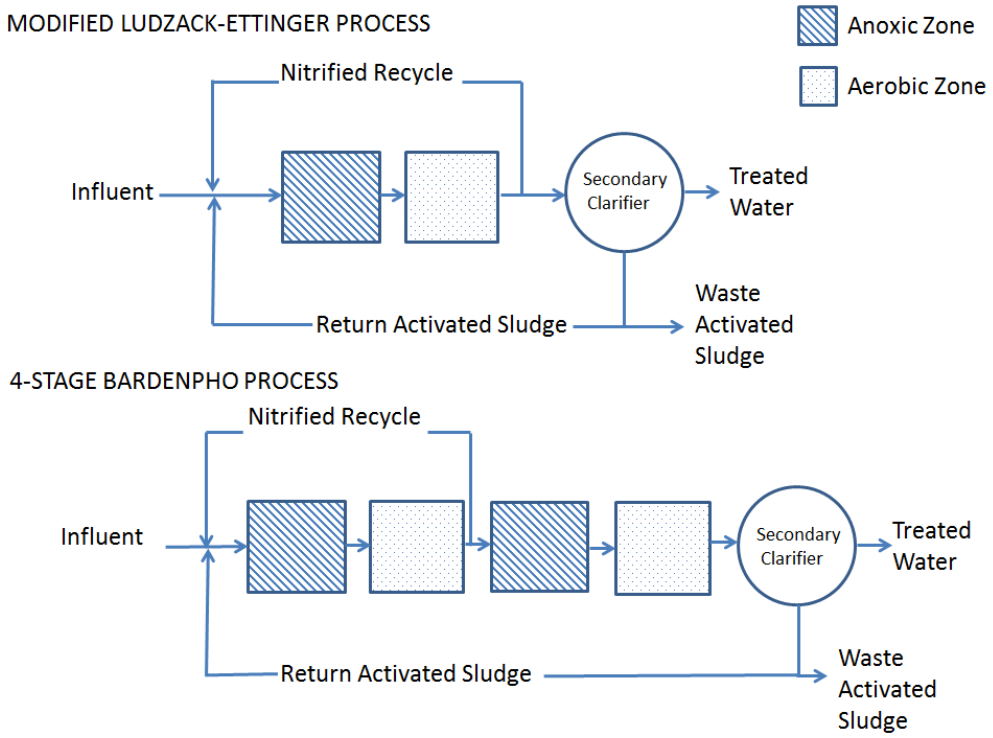

Figure 5-10 Multiple-Stage Processes for Nitrogen Removal

These processes are very similar to those discussed in the first section, but without the anaerobic zone for phosphorus removal.

The MLE process utilizes an internal recycle following the nitrification (aerobic) zone to return nitrates to the anoxic zone for denitrification. The recycle rate determines denitrification efficiency.

The four-stage Bardenpho process is similar but follows the nitrification zone with a second anoxic zone and a post-aeration zone. The second anoxic zone provides additional denitrification to achieve a higher level of nitrogen removal. Post-aeration is necessary to remove nitrogen gas formed during denitrification and to provide dissolved oxygen ahead of the clarifiers so that settling performance is not hindered.

A carbon source is required to allow denitrification to occur. In the first anoxic zone, BOD in influent wastewater or primary effluent provides the necessary carbon source for denitrification. In the second anoxic zone, due to the low BOD concentration remaining at that stage of treatment, either an external carbon source must be provided or carbon available from the products of endogenous respiration must be utilized. If an external source is utilized, such as methanol, a high rate of denitrification can be achieved, but residual methanol must be removed. This process is referred to as enhanced MLE (eMLE). Without an external source (Bardenpho), the denitrification rate is very low and the volume of the second anoxic zone must be substantially increased.

The MLE process is well proven and can reliably achieve an effluent total nitrogen level of 5 to 7 mg/L on average. The Bardenpho system can meet an effluent limit of 3 to 5 ml/l total nitrogen, but requires additional tankage due to the additional zones and more conservative design criteria; and it may require the addition of an external carbon source, such as

This document is in draft form. The contents, including any opinions, conclusions or recommendations contained in, or which may be implied from, this draft document must not be relied upon. GHD reserves the right, at any time, without notice, to modify or retract any part or all of the draft document. To the maximum extent permitted by law, GHD disclaims any responsibility or liability arising from or in connection with this draft document.

methanol, and removal of residual methanol. The Bardenpho system can achieve an effluent total nitrogen of 3 mg/L on average if the effluent is filtered to remove fine suspended solids that contain small amounts of nitrogen. At this performance level (3 mg/L), it is classified as an ENR treatment process.

Multi-stage processes for nitrogen removal have the following advantages:

- Can reliably achieve 3 to 5 mg/L or 5 to 7 mg/L total nitrogen on average.
- Well developed, investigated and implemented with established design criteria and features.
- No significant environmental or public acceptance concerns.

They have the following disadvantages:

- Operational requirements require skilled staff to control the process.
- High energy usage with aeration requirements and recycle pumping.
- High capital costs for new tankage.

(continued)

DRAFT

This document is in draft form. The contents, including any opinions, conclusions or recommendations contained in, or which may be implied from, this draft document must not be relied upon. GHD reserves the right, at any time, without notice, to modify or retract any part or all of the draft document. To the maximum extent permitted by law, GHD disclaims any responsibility or liability arising from or in connection with this draft document.

c. **Multiple-Phase/Cyclical Aeration.** Figure 5-11 illustrates two processes that utilize multiple phases for nitrogen removal in lieu of dedicated zones.

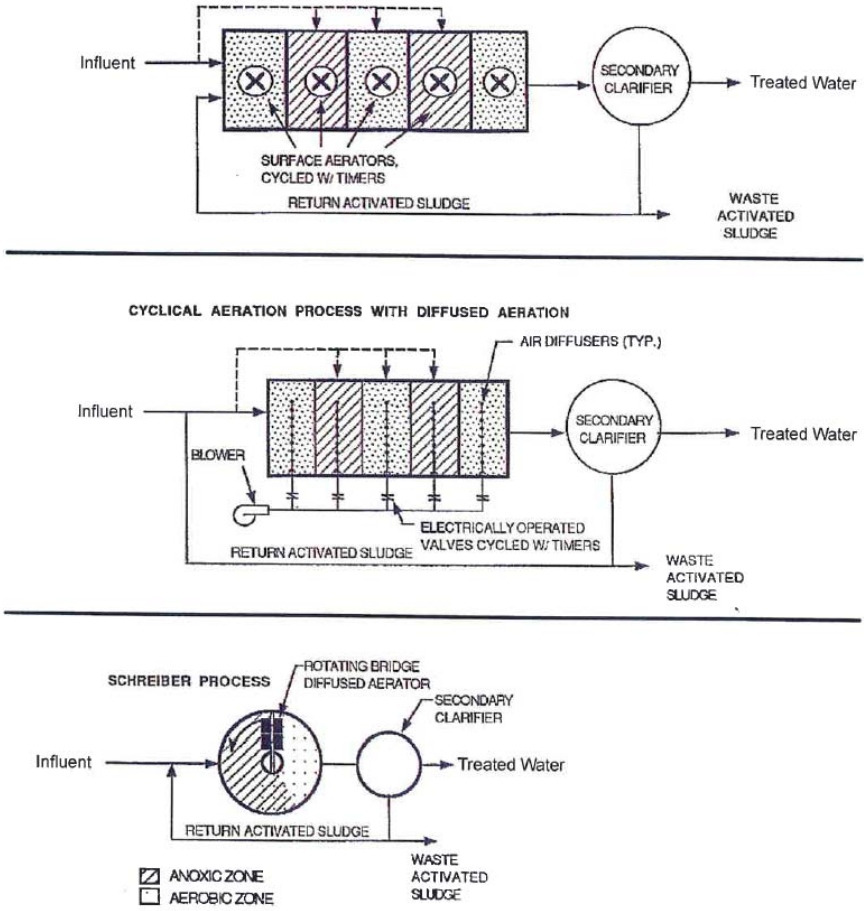

Figure 5-11 Multiple-Stage Cyclical Aeration

Alternating aerobic/anoxic conditions are created within the same zone or tankage. The first process is cyclical nitrogen removal (CNR), also called cyclical aeration, which can be used with mechanical aerators, submerged turbines, or diffused air. Timers are used with mechanical aerators to turn the aerators on and off, thereby creating alternating aerobic conditions for nitrification and anoxic conditions for denitrification. Preferably, there should be at least three compartments in series; the final compartment is aerated continuously. Step-feeding of influent flow can be utilized to provide a carbon source for denitrification in downstream compartments; but even without step-feed, wastewater carbon flows forward negating the need for a nitrate recycle to return nitrates to a dedicated anoxic zone. Internal recycle of nitrified effluent is not required since nitrification and denitrification occur within the same zone, although recycle can be provided for operational flexibility. Mixing is desirable during the aerator off cycle to provide good solids contact for denitrification. CNR can also be used with diffused aeration systems by providing electrically operated valves on the air headers or drop legs for each compartment to turn the air on and off.

Another multiple-phase system is the Schreiber process, which utilizes a circular tank and a rotating bridge with aeration diffusers. As the bridge rotates, aerobic conditions are created by aerating that portion of the tank, which gradually loses DO until anoxic conditions prevail,

This document is in draft form. The contents, including any opinions, conclusions or recommendations contained in, or which may be implied from, this draft document must not be relied upon. GHD reserves the right, at any time, without notice, to modify or retract any part or all of the draft document. To the maximum extent permitted by law, GHD disclaims any responsibility or liability arising from or in connection with this draft document.

thereby creating alternating aerobic/anoxic phases in all portions of the tank. Internal recycle of nitrified effluent and step-feeding are not required.

Multiple-phase processes can achieve a nitrogen level of 8 to 10 mg/L in the effluent. These processes are well proven at operating installation. In terms of screening criteria, these processes would be very similar to the multiple-stage processes discussed, with some additional advantages and disadvantages. However, the CNR process and Schreiber process differ in situations involving retrofits to existing activated sludge plants. The CNR process can generally be retrofitted to existing tankage with minor modifications. The Schreiber process requires new tankage, and therefore, is more suited to new plants or plants without existing aeration tanks.

Multiple-phase processes have the following advantages:

- Can reliably achieve 8 to 10 mg/L total nitrogen.
- Well proven technology.
- No significant environmental or public acceptance concerns.
- Schreiber process is provided with process guarantee by the vendor.
- Internal recycle pumping of nitrified effluent is not required.
- Cycles can be varied to increase or decrease cycle times, thereby providing operational flexibility in optimizing the process.

Multiple-phase processes have the following disadvantages:

- Operational requirements are intensive to control the process.
- Energy usage is moderate.
- High capital costs for new tankage.
- The settling characteristic of the sludge is not as good as multi-phase processes with dedicated anoxic zones.

d. **Membrane Bioreactors:** Membrane Bioreactors (MBRs) are activated sludge processes that are typically configured as MLE or 4-stage Bardenpho processes for nitrogen removal. MBRs utilize membrane filter modules (instead of settling tanks) to separate the treated water from the suspended solids. They can provide an even higher quality effluent; typically 3 mg/L total nitrogen for a Bardenpho configuration with methanol addition. The membranes require special controls and cleaning procedures to provide long-term performance. Figure 5-12 illustrates how the membrane system and associated equipment is used to replace the settling tanks.

DRAFT

This document is in draft form. The contents, including any opinions, conclusions or recommendations contained in, or which may be implied from, this draft document must not be relied upon. GHD reserves the right, at any time, without notice, to modify or retract any part or all of the draft document. To the maximum extent permitted by law, GHD disclaims any responsibility or liability arising from or in connection with this draft document.

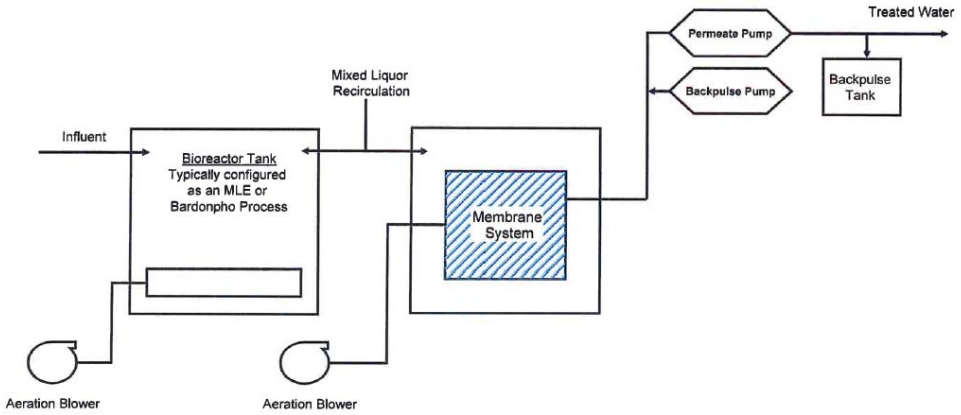

Figure 5-12 Membrane Bioreactor System

The MBR process has the following advantages:

- No final settling tanks are required.
- Effluent can potentially be reused for non-potable uses such as toilet flushing or irrigation because of the high degree of particulate removal.
- Can increase capacity of existing tankage by allowing a higher biomass concentration in the aeration tank.

MBR processes have the following disadvantages:

- Capital costs for the tankage and membrane facilities are high.
- Membrane replacement costs are high.

e. **Sequencing Batch Reactors:** SBRs consist of batch-type processes utilizing fill-and-draw operation (as illustrated in Figure 5-13) in a self-contained system.

DRAFT

This document is in draft form. The contents, including any opinions, conclusions or recommendations contained in, or which may be implied from, this draft document must not be relied upon. GHD reserves the right, at any time, without notice, to modify or retract any part or all of the draft document. To the maximum extent permitted by law, GHD disclaims any responsibility or liability arising from or in connection with this draft document.

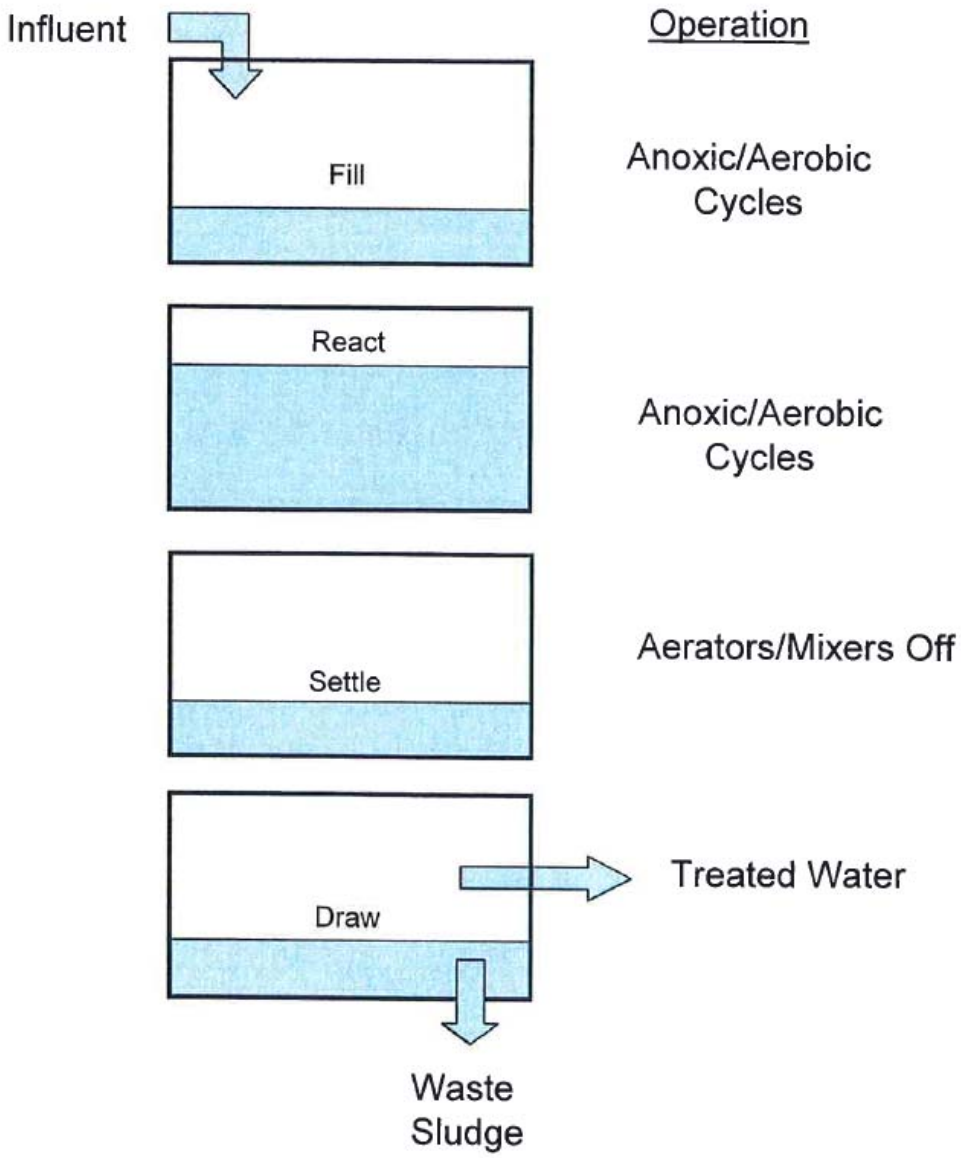

Figure 5-13 Sequencing Batch Reactor

Equalization, aeration, anoxic reactor, and settling are accomplished in a single basin. Continuous operation can be achieved by providing several SBR basins, such that each basin is intermittently fed, and in a different phase of the cycle. The various phases include fill, react, settle, draw, and idle. Wastewater is added during the fill cycle with and without aeration. During the react phase, nitrification and denitrification reactions are completed by alternating the aeration cycle. The next phase is settling for liquid/solids separation, followed by decanting of clarified effluent in the draw phase. During the idle phase, sludge wasting is performed while the basin is waiting to begin the next cycle. The length of the cycles can be varied to achieve the desired degree of treatment. Internal recycle and return of activated sludge is not required. A number of manufacturers have developed proprietary processes and equipment to enhance nitrogen removal, treatment efficiency, and simplify operations.

This document is in draft form. The contents, including any opinions, conclusions or recommendations contained in, or which may be implied from, this draft document must not be relied upon. GHD reserves the right, at any time, without notice, to modify or retract any part or all of the draft document. To the maximum extent permitted by law, GHD disclaims any responsibility or liability arising from or in connection with this draft document.

The following is a listing of some of the more widely marketed systems:

- **Aqua SBR:** Utilizes a proprietary floating mixer, effluent decanter, and microprocessor control system.
- **Omniflow:** Utilizes a patented control system for aeration phases to optimize nitrification and denitrification cycles.
- **CASS:** Cyclic Activated Sludge System is similar to other SBRs but utilizes a proprietary selector reactor to improve settling characteristics.
- **ICEAS:** Intermittent Cycle Extended Aeration System is a modified batch system. Continuous influent flow is provided during all cycles to reduce the valving and headworks requirements compared to non-continuous flow SBRs. ICEAS also utilizes a patented anoxic selector.

A high level of nitrogen removal can be achieved due to the ability to retain the reactor contents as desired. Since settling occurs in the same basin, separate final settling tanks are not required.

SBRs have the following advantages:

- Batch operation allows reactor contents to be retained until desired effluent quality is achieved.
- RAS and internal recycles are not required.
- Settling occurs under totally quiescent conditions with no influent flow (except ICEAS), eliminating short circuiting.
- All phases are provided in a single basin, eliminating the need for separate final clarifiers, therefore they typically have lower capital costs.
- Highly flexible operationally with ability to adjust cycle times.

They have the following disadvantages:

- A sophisticated control system with valves, timers, probes, and level sensors is required to control intermittent feeding, cycle times, phases, and process performance.
- Downstream equalization typically required for cost-effective design of filtration and disinfection processes.
- Volume of reactor must be increased to allow for cycle times and use of basin for settling.
- High operating costs due to increased pumping.

f. **Magnetite Ballasted Settling.** Magnetite ballasted settling is a developing technology that is gaining popularity. The technology is patented by Cambridge Water Technologies (recently purchased by Siemens) with a system called BioMag. The BioMag process is an enhanced biological wastewater treatment process that uses magnetite, a common inert iron derivative, to increase the specific gravity of a biological flock. Magnetite addition allows for a higher mixed liquor suspended solids (MLSS) for a given clarifier area and also increases the treatment capacity of the biological tanks. A process schematic is shown in Figure 5-14. The majority of the magnetite ballasted sludge is returned to the front of the process through the return sludge line. Waste sludge is pumped through a shear mixer and then to a recovery

DRAFT

This document is in draft form. The contents, including any opinions, conclusions or recommendations contained in, or which may be implied from, this draft document must not be relied upon. GHD reserves the right, at any time, without notice, to modify or retract any part or all of the draft document. To the maximum extent permitted by law, GHD disclaims any responsibility or liability arising from or in connection with this draft document.

drum. In these two processes, the magnetite is removed and recovered from the sludge. The recovered magnetite is then blended with a small amount of fresh magnetite. This slurry is mixed with a diverted portion of the return sludge from the secondary clarifiers in the magnetite mix tank prior to return to the biological treatment trains. BioMag has indicated a recovery rate of over 95% of the magnetite material.

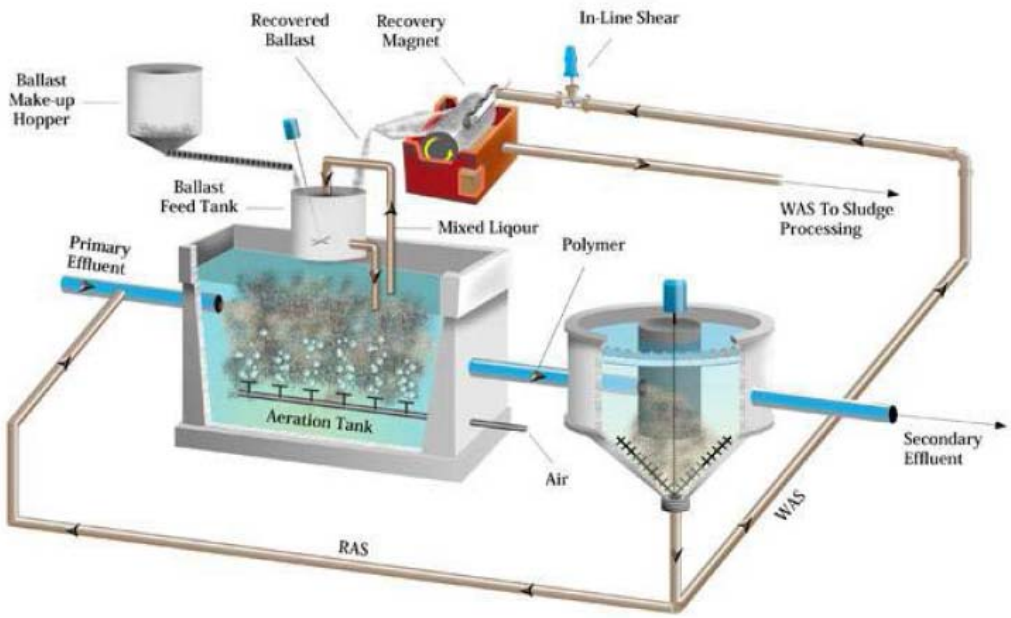

Source: http://cambridgewatertech.com/technology/biomag

Figure 5-14 BioMag Process Schematic

The system can achieve an effluent total phosphorus concentration as low as 0.2 mg/L without downstream filtration when operated within the operating parameters recommended by the manufacturers. A potential concern with this alternative is that there are only a few permanently installed systems for operational comparison.

Magnetite ballasted settling has the following advantages:

- Reduced amount of secondary clarifier surface area required
- Reduced aeration tank volume required

Magnetite ballasted settling has the following disadvantages:

- Greater mixing is required to keep mixed liquor in suspension
- Additional solids processing equipment required for removal and return of magnetite
- Limited approved sources of magnetite

g. **Multi-Sludge Alternatives:** Multi-sludge systems have also been utilized for nitrogen control. Two-sludge and three-sludge systems are illustrated in Figure 5-15.

This document is in draft form. The contents, including any opinions, conclusions or recommendations contained in, or which may be implied from, this draft document must not be relied upon. GHD reserves the right, at any time, without notice, to modify or retract any part or all of the draft document. To the maximum extent permitted by law, GHD disclaims any responsibility or liability arising from or in connection with this draft document.

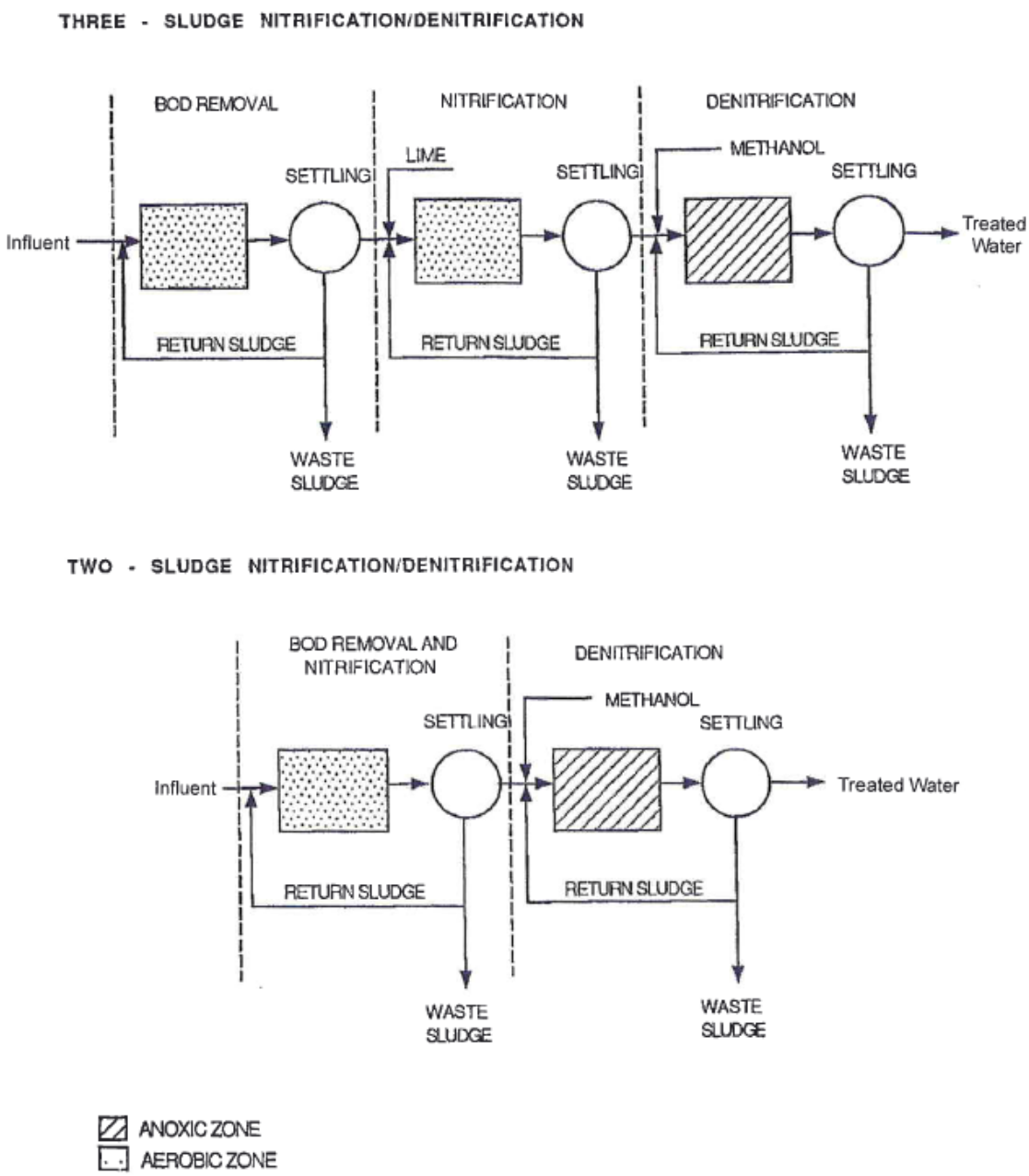

Figure 5-15 Multiple Sludge Processes

Contrary to single-sludge systems where processes are combined in a single step, multiple sludge systems separate process functions by utilizing intermediate clarifiers. A two-sludge system combines BOD removal and nitrification in one step, followed by suspended growth denitrification in a second step, each with its own clarifier(s). A two-sludge system combines BOD removal and nitrification in one step, followed by suspended growth denitrification in a second step, each with its own clarifier(s). Methanol or other carbon source addition is required for denitrification due to the lack of influent BOD available following the first step. A three-sludge system further separates BOD removal and nitrification, as well as denitrification, thereby requiring a third set of clarifiers.

Multiple sludge systems can achieve a high level of nitrogen removal and were often the process of choice used while single-sludge systems were under development. The thought

This document is in draft form. The contents, including any opinions, conclusions or recommendations contained in, or which may be implied from, this draft document must not be relied upon. GHD reserves the right, at any time, without notice, to modify or retract any part or all of the draft document. To the maximum extent permitted by law, GHD disclaims any responsibility or liability arising from or in connection with this draft document.

was that by separating the processes, each process could be better controlled, compared to combining two or more processes. However, due to the limited solids production which occurs in nitrification and denitrification, process control of the solids inventory is more difficult. The need for one or two sets of intermediate clarifiers increases capital costs. The multiple steps result in higher hydraulic head losses. O&M costs are typically greater due to the additional clarifiers and process control requirements for each of the separate phases.

Multi-sludge systems have the following advantage:

- Individual processes can be controlled to maximize nitrogen removal.

They have the following disadvantages:

- More difficult and complex operational control requirements with two or more separate processes.
- Less benefit of BOD reduction and alkalinity generation with post-denitrification compared to single-sludge systems with pre-denitrification.
- More sludge production with separate-stage BOD removal.
- Larger land area is required for intermediate clarifiers compared to single-sludge systems.
- Methanol addition required with post-denitrification, increasing O&M costs.
- High capital costs associated with extensive new tankage.

3. **Attached Growth (Fixed-Film) Biological Wastewater Treatment**

Attached growth systems are wastewater treatment systems where the biological growth occurs on a solid medium that comes in contact with the wastewater. The systems are used for BOD removal, nitrification, and/or denitrification. BOD removal and nitrification can be provided by trickling filters, RBCs, aerated biological filters, packed beds, and fluidized beds. Denitrification can be provided by RBCs, packed bed, and fluidized beds. A special type of attached growth system located in an activated sludge, known as an Integrated Fixed-Film Activated Sludge (IFAS) process, is generally used for nitrification but could also be considered for denitrification. Fixed-film enhancement involves the placement of media, such as small plastic elements, sponges, or hanging rope-like strands, into suspended growth systems, thereby increasing the capacity of such systems by providing surface area for microbial growth or organisms, which increases the effective solids content in the reactor.

a. **Rotating Biological Contactor (RBC):** RBC units are attached growth systems that function as described previously. When RBC units are used for nitrogen removal, a separate submerged (anoxic) RBC follows the partially submerged (aerobic) RBC to provide denitrification and remove nitrogen to the 5 to 7 mg/L total nitrogen range. Methanol must be added to the anoxic RBC to assist nitrogen removal. This RBC process configuration is illustrated in Figure 5-16.

DRAFT

This document is in draft form. The contents, including any opinions, conclusions or recommendations contained in, or which may be implied from, this draft document must not be relied upon. GHD reserves the right, at any time, without notice, to modify or retract any part or all of the draft document. To the maximum extent permitted by law, GHD disclaims any responsibility or liability arising from or in connection with this draft document.

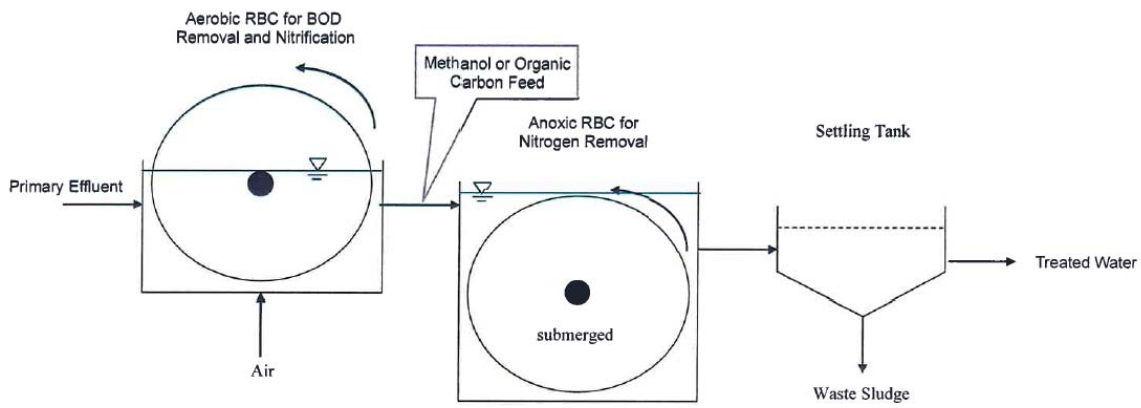

Figure 5-16 Rotating Biological Contactor

RBCs have the following advantages:

- The technology is used extensively for small treatment facilities and is well accepted by MassDEP.
- Energy requirements are low.
- Operational requirements are low.

They have the following disadvantages:

- Must be preceded by primary treatment.
- Must be followed by a final settling tank.
- Capital costs are high.
- Cold weather performance is a concern and the tanks must be covered.
- There is minimal process control and flexibility for high seasonal flows.

b. **Denitrification Filters:** Denitrification filters are a form of Biologically Active Filters (BAFs) which are operated anoxically for denitrification. They would follow the BOD removal and nitrification phase to provide separate-stage denitrification. A high level of nitrification would be necessary prior to the filters to achieve a low level total nitrogen discharge in the treated water. The general types of denitrification filters include: downflow packed bed systems, upflow media beds and continuous backwash filters.

Downflow Packed-Bed Denitrification Filters: Downflow packed bed systems are actually deep bed sand filters operated to encourage attached microorganisms to denitrify. A denitrification filter is used in conjunction with a nitrification step. Methanol addition is typically used to provide the carbon source needed for denitrification. The packed beds also act as effluent filters to remove suspended solids and improve effluent quality. Periodically, the beds must be backwashed similar to sand filters and must be bumped with backwash for a few seconds to release nitrogen gas which accumulates in the filter media and increases headloss through the media. Figure 5-17 presents a generic schematic for denitrifying filters.

DRAFT

This document is in draft form. The contents, including any opinions, conclusions or recommendations contained in, or which may be implied from, this draft document must not be relied upon. GHD reserves the right, at any time, without notice, to modify or retract any part or all of the draft document. To the maximum extent permitted by law, GHD disclaims any responsibility or liability arising from or in connection with this draft document.

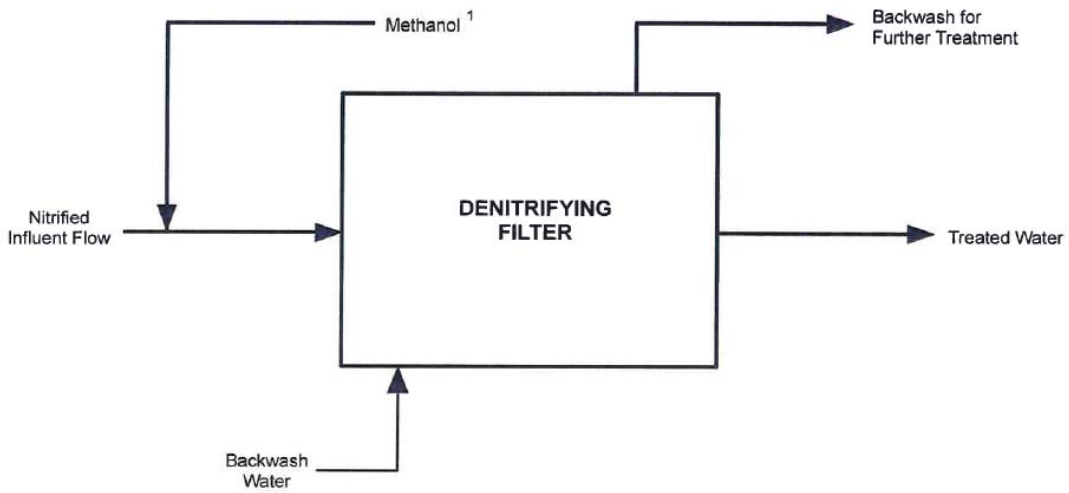

[1] Methanol addition is not needed for wood chip bed filters

Figure 5-17 Denitrifying Filter

Downflow packed-bed denitrification filter systems include proprietary systems such as the TETRA denitrification filter.

Upflow Denitrification Filters: Upflow denitrification filters include filters that use either media that is heavier than water (Degremont Biofor) or a floating plastic media (Kruger Biostyr). Denitrifying microorganisms attach to the media as nitrified effluent flows upward through the media. Reactor sizes and area requirements are small due to the highly effective biomass concentration in the column. Methanol addition is typically used to provide the carbon source needed for denitrification.

Continuous Backwash Filters: Continuous backwash filters consist of a column of sand media in which the nitrified wastewater is introduced at the bottom. The wastewater flows upward as the media flows downward and is discharged over a weir at the top. An air lift pump induces the flow which recirculates the media from the top to bottom and back. The media in this type of filter is continuously cleaned as it recirculates and thus a separate backwash cycle is not required. An example is the Parkson Dynasand Filter.

c. **Biological Aerated Filters (BAF):** BAFs consist of submerged filter media which allow biological growth on the media. The filters act as deep upflow beds with air injected either below the bed or at an intermediate point, depending on the treatment process. They are used mainly for BOD and TSS removal and nitrification of ammonia. A denitrifying filter is an anoxic form of the BAF and would typically follow an aerobic BAF for nitrogen removal. A primary clarifier is typically required as a pretreatment step before the flow goes to the BAF.

BAFs have the following advantages:

- Reliable technology for BOD and TSS removal and some nitrogen removal.
- Potential for air emission is minimal, as filters are enclosed in a building.

This document is in draft form. The contents, including any opinions, conclusions or recommendations contained in, or which may be implied from, this draft document must not be relied upon. GHD reserves the right, at any time, without notice, to modify or retract any part or all of the draft document. To the maximum extent permitted by law, GHD disclaims any responsibility or liability arising from or in connection with this draft document.

They have the following disadvantages:

- High capital costs for primary treatment and the BAF.
- Cold effluent wastewater temperatures may impact the nitrification process.

d. **Integrated Fixed-Film Activated Sludge (IFAS) Systems.** IFAS technologies involve the addition of media for fixed-film growth in activated sludge aeration basins to increase the nitrification capacity. Depending on the type of media, IFAS can also be used for denitrification. Figure 5-18 presents a generic schematic for the fixed-film activated sludge technologies.

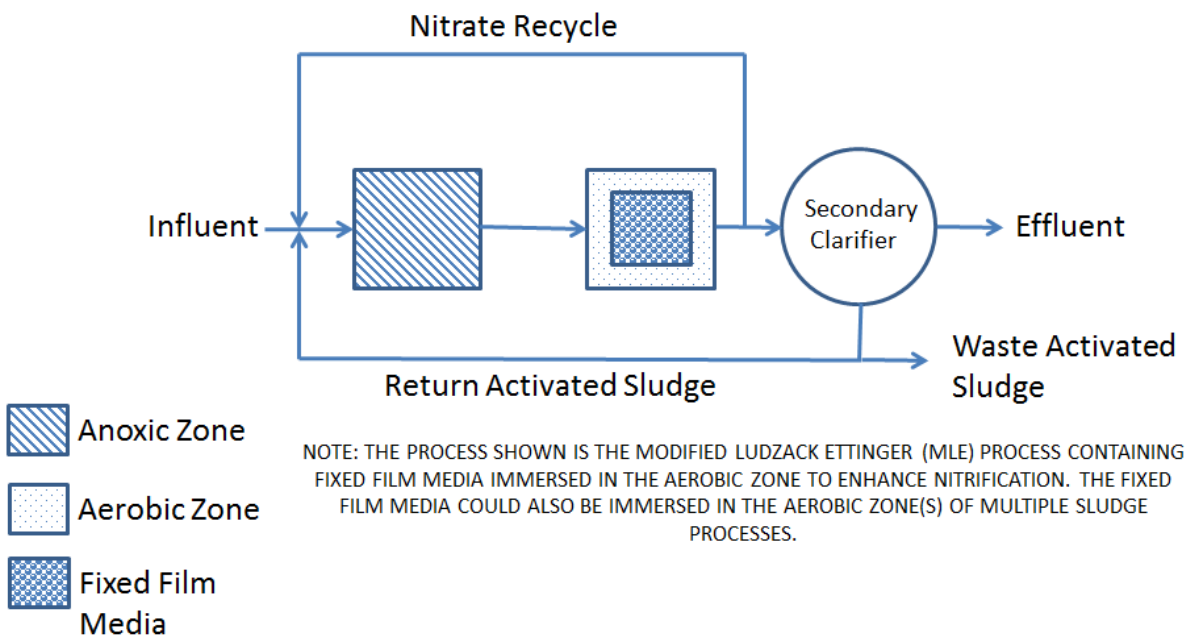

Figure 5-18 Integrated Fixed-Film Activated Sludge (IFAS)

Sponge-type media, or plastic media, are freely suspended by mixing in the aeration basin. The media is contained within the aeration basin by screens. Sponge media is typically returned to the head of the media zone by an airlift pump to prevent accumulation at the downstream screen. Another type of system, called Ringlace, utilizes ropes or strands of plastic material which are mounted in racks and placed in the aeration tank. The racks can be fixed or mounted on moveable rails to allow relocation of the racks to provide access to the air diffusers. Submerged RBCs and other types of large plastic media can also be used for fixed-film enhancement.

These systems have been thoroughly investigated and results have shown that they are highly effective and can be combined in various single-sludge treatment schemes to improve nitrogen removal performance.

Fixed-film enhanced systems have the following advantages:

- Can be utilized in a variety of treatment schemes.
- Shown to be highly effective in enhancing nitrification.
- Provides flexibility in operation and process control.

They have the following disadvantages:

This document is in draft form. The contents, including any opinions, conclusions or recommendations contained in, or which may be implied from, this draft document must not be relied upon. GHD reserves the right, at any time, without notice, to modify or retract any part or all of the draft document. To the maximum extent permitted by law, GHD disclaims any responsibility or liability arising from or in connection with this draft document.

- Pilot testing may be required if wastewater has unusual characteristics.
- High material costs.
- Control of growths, such as nematodes, may be required (rope and sponge media).
- Replacement and maintenance of media is required (rope and sponge media).

IFAS systems are not a process by themselves, but enhance other processes and therefore must be included in the evaluation of other process schemes designed to meet the desired level of treatment.

Screening of Secondary Treatment Alternatives

The screening of secondary treatment alternatives is based on the description provided for each alternative, its advantages and disadvantages, and the screening criteria established in Chapter 2 of this report. A summary of secondary treatment alternative and a side-by-side comparison of screening criteria is included in Table 5-1.

Use of a biological phosphorus removal technology for Uxbridge is not recommended due to the facility size, operating complexity, and method of handling and disposing of the sludge generated as a result of wastewater treatment. Chemical treatment for phosphorus removal is already familiar to the operators of the facility and is recommended for further evaluation in combination with tertiary filtration, which is the least complex phosphorus removal option for the facility.

The following nutrient removal processes are recommended for further evaluation:

- Modified Ludzack-Ettinger Process (MLE) with chemical addition and filtration for phosphorus removal
- Magnetite Ballasted Settling Process with chemical addition and filtration for phosphorus removal
- Integrated Fixed-Film Activated Sludge (IFAS) with chemical addition and filtration for phosphorus removal

DRAFT

5.5.4 Disinfection Alternatives

Introduction

This section presents several alternatives for disinfection which will be required by MassDEP.

Existing Infrastructure

The Uxbridge WWTF has two chlorine contact tanks. The tanks do not have adequate volume to provide the TR-16 recommended minimum thirty minute contact time during future peak flow events. The concrete tanks are in good condition.

"Fix It First" Alternative

Although the existing tanks are undersized to provide adequate contact time during peak flow events, the tanks could be expanded to provide adequate contact time.

Chlorination

Chlorination can be provided by the addition of a number of chemicals, including sodium hypochlorite, calcium hypochlorite, gaseous chlorine, bromine chloride, and chlorine dioxide. Use of

This document is in draft form. The contents, including any opinions, conclusions or recommendations contained in, or which may be implied from, this draft document must not be relied upon. GHD reserves the right, at any time, without notice, to modify or retract any part or all of the draft document. To the maximum extent permitted by law, GHD disclaims any responsibility or liability arising from or in connection with this draft document.

either sodium hypochlorite or calcium hypochlorite for disinfection is very similar and involves storage and feeding of hypochlorites in solution form. Hypochlorites are hazardous and corrosive, but these chemicals are safer than gaseous chlorine with respect to storage and overall management. All chlorine compounds can combine with organic material and produce trihalmethanes (THMs), which are suspected carcinogens.

Sodium hypochlorite is the preferred method of chlorination and it is the current disinfection process at the Uxbridge WWTF. It has the following advantages:

- The process can be controlled for feed dosages and chlorine residual.
- Minimal energy use.
- Low O&M costs.

Use of chlorination for disinfection has the following disadvantages:

- A large contact tank is needed.
- The storage and handling of sodium hypochlorite can be a safety hazard.
- Sodium hypochlorite has a limited shelf life.
- Chlorine compounds can produce THMs

Ozone

Ozone has been found to be highly effective in disinfection and has few potential adverse environmental impacts on receiving waters and water supplies. Ozone must be generated on site, which normally involves the use of high voltage electrodes and pure oxygen. Ozone is then transferred from the gas phase to the liquid phase with diffusers and closed contactors. The off-gases from the contactor must be treated thermally to destroy excess ozone, which is toxic.

Ozone presents less environmental concern than chlorination because ozone rapidly dissipates to oxygen after application, leaving no ozone residual and adding dissolved oxygen to the treated water. Ozone can, however, produce toxic mutagenic and/or carcinogenic compounds. Unlike chlorine, ozone does not produce a disinfection residual concentration that can be measured and used as an indication of satisfactory disinfection.

The cost to produce ozone on site is high, resulting from the high capital cost of generation equipment and high energy requirements. Ozonation is labor-intensive because the system is complex and difficult to operate and maintain.

Disinfection with ozone has the following advantages:

- Ozone adds dissolved oxygen to the treated water.
- Fewer adverse environmental impacts as compared to chlorination.

It has the following disadvantages:

- Ozone is toxic, even though it rapidly dissipates to oxygen.
- High capital costs associated with generating equipment.
- High energy usage to generate ozone.
- Complex operation and maintenance.
- High O&M costs.

DRAFT

This document is in draft form. The contents, including any opinions, conclusions or recommendations contained in, or which may be implied from, this draft document must not be relied upon. GHD reserves the right, at any time, without notice, to modify or retract any part or all of the draft document. To the maximum extent permitted by law, GHD disclaims any responsibility or liability arising from or in connection with this draft document.

- Can produce toxic mutagenic and/or carcinogenic compounds.
- Destruction of off-gases from the ozone contactors is required.
- Does not produce a monitorable residual.

Ultraviolet (UV) Radiation

Unlike the previous alternatives, UV radiation provides disinfection without the use of chemicals. UV light provides radiation which penetrates bacterial cell walls and viruses and kills them or prevents them from reproducing. No toxic residuals are produced. The UV bulbs are contained in racks or modules which are submerged in channels. Required contact time with the bulbs is short.

Suspended solids in the treated water can interfere with disinfection efficiency by preventing light transmission in the water; therefore, high quality treated water is required prior to the UV disinfection. The UV bulbs become dirty over time and must be periodically removed and cleaned, which is accomplished by dipping the rack of bulbs in cleaning solution or utilizing a submerged mechanical wiper blade system. The bulbs must be periodically replaced, which adds to the O&M costs; however, UV disinfection has been found to be cost competitive with chlorination.

UV disinfection has the following advantages:

- No adverse environmental impacts.
- Minimal space requirements due to the required short contact time.
- Ease of operation and maintenance.
- Cost competitive with other disinfection techniques.
- Well-proven effectiveness.

It has the following disadvantages:

- Suspended solids, turbidity, and color can interfere with the effectiveness of disinfection.
- High quality treated water is required prior to UV disinfection.
- Periodic cleaning and replacement of bulbs is required.
- Does not produce a monitorable residual.

Screening of Disinfection Alternatives

Table 5-2 presents a matrix summary of disinfection alternatives for further evaluation. The following alternatives are recommended for further evaluation:

- Chlorination
- UV Disinfection

5.5.5 Post Aeration

Existing Infrastructure

The Uxbridge WWTF has a cascade aeration system to increase the level of dissolved oxygen in the effluent. The present system is undersized and the facility has been unable to meet its effluent dissolved oxygen requirements on several instances during low flow summer conditions. Additionally, the system is within the 100 year flood zone.

DRAFT

This document is in draft form. The contents, including any opinions, conclusions or recommendations contained in, or which may be implied from, this draft document must not be relied upon. GHD reserves the right, at any time, without notice, to modify or retract any part or all of the draft document. To the maximum extent permitted by law, GHD disclaims any responsibility or liability arising from or in connection with this draft document.

"Fix it First" Alternative

The existing cascade aeration system is undersized and within the 100 year flood zone. In order to re-use the system, several steps would have to be added and the walls of the structure would have to be built up above the 100 year flood zone. Adding steps to the existing structure is infeasible due to hydraulic constraints. Cascade aeration is an uncontrolled process, making it more difficult to ensure that a required dissolved oxygen level is maintained. Because the current system is undersized, uncontrolled, and in a 100 year flood zone, upgrading the cascade aeration process was not considered for further evaluation.

Mechanical Post Aeration

Mechanical post-aeration systems use a mechanical system to re-oxygenate wastewater. Available systems include fixed or floating mechanical aerators, fine or coarse bubble aeration, jet aeration, and pump agitators. Mechanical aeration is a controlled process. A mechanical post-aeration system would require the construction of a new tank downstream of the disinfection system. The tank could likely be located out of the 100 year flood zone.

Screening of Post Aeration Technologies

Mechanical post-aeration is the recommended alternative since the process can likely be located out of the 100 year flood zone and will provide better dissolved oxygen concentration control than a cascade aeration system.

5.5.6 Support Facilities

Existing Infrastructure

The Uxbridge WWTF has a plant water system and chemical feed system, which are considered support facilities. The mechanical equipment for both systems is well past its useful life.

"Fix it First" Alternative

The "Fix it First" alternative is to replace the mechanical equipment for both systems. This alternative is recommended for further evaluation.

Screening of Support Facility Technologies

The "Fix it First" alternative is recommended for further evaluation.

5.5.7 Residuals Management

Introduction

The purpose of this section is to identify and screen alternatives that could be used to properly treat and dispose of residuals from new wastewater treatment processes. Residuals are byproducts of wastewater treatment and are often difficult to handle, expensive to dispose of, and can be a source of odors. The following is a description of the various types of residuals associated with municipal sanitary wastewater.

1. **Septage**

Septage is comprised of wastewater solids that accumulate in septic tanks, tights tanks, and cesspools, and includes sludge, scum, and liquids.

DRAFT

This document is in draft form. The contents, including any opinions, conclusions or recommendations contained in, or which may be implied from, this draft document must not be relied upon. GHD reserves the right, at any time, without notice, to modify or retract any part or all of the draft document. To the maximum extent permitted by law, GHD disclaims any responsibility or liability arising from or in connection with this draft document.

2. **Trap Grease**

Trap grease is the material that is periodically pumped out of restaurant grease traps and is a combination of solid floatable grease, settleable solids, and water. Trap grease is difficult to handle, difficult to dispose of, and should be isolated from wastewater treatment processes because it fouls piping, valves, and other treatment equipment.

3. **Wastewater Screenings and Grit**

Screenings and grit are byproducts of treating wastewater, septage, and trap grease. Screenings are large solid objects removed from wastewater in bar screens during preliminary treatment. Grit consists primarily of sand and gravel and is also typically removed during the preliminary treatment process. Removing screenings and grit from wastewater and sludge treatment processes is important to prevent damage to pumps, valves, and pipelines.

4. **Wastewater Sludge**

Sludge (also called biosolids) is the organic material removed from wastewater treatment processes. Wastewater sludge is solid material that settles by gravity in a primary wastewater treatment process, or is a combination of microorganisms and organic material generated in secondary/advanced treatment processes and effluent polishing processes. Sludge is produced as a liquid and typically has a solids concentration of 5,000 to 20,000 mg/L (0.5 to 2% total solids). It is typically thickened and disposed of at regional disposal facilities at a concentration of 5% total solids. Also, it can be dewatered and disposed of at regional disposal facilities as a sludge cake at a concentration of 20 to 25% total solids. It can also be dewatered and composted to produce a soil conditioner material of approximately 35 to 50% total solids.

DRAFT

Existing Infrastructure

Primary and secondary sludge are thickened in a gravity thickener. A sludge holding tank is used to store waste activated sludge before it is pumped to the gravity thickener. The gravity thickener is adequately sized for future loads. All mechanical equipment is well past its useful life, however tankage concrete was found to be in good condition.

"Fix it First" Alternative

The facility could replace the mechanical equipment in the sludge holding tank and gravity thickener and continue to combine primary and waste activated sludge, and dispose of the thickened sludge at a regional facility.

Septage and Trap Grease Treatment and Disposal Alternatives

Septage and trap grease are collected from residences and commercial establishments and transported to the Uxbridge WWTF where they are treated. Septage is accepted from both within and outside the Town boundaries. Trap grease originating from outside of the Town is not accepted. The Draft Needs Assessment Report, Chapter 5, provides a detailed description of the septage treatment process at the Uxbridge WWTF. Septage treatment at the WWTF makes the best use of existing facilities and provides reliable service and flexible operation.

Septage currently goes through preliminary treatment and is treated with the facilities liquid process. The septage could also be treated in the solids process reducing the load to the facility. Handling septage with the solids process has the following advantages:

- Reduced capital cost for secondary treatment system expansion

This document is in draft form. The contents, including any opinions, conclusions or recommendations contained in, or which may be implied from, this draft document must not be relied upon. GHD reserves the right, at any time, without notice, to modify or retract any part or all of the draft document. To the maximum extent permitted by law, GHD disclaims any responsibility or liability arising from or in connection with this draft document.

- Reduced annual operating cost for aeration
- Septage is not "handled twice" – as part of the liquid process and then again with the sludge stream
- Septage is typically easier to decant in a gravity thickener prior to processing

Handling septage with the solids process has the following disadvantages:

- Increased sludge hauling costs

In order to reduce the loading requirements (and associated system size expansion) to the secondary treatment process, the Town decided that septage should be treated with the solids process instead of with the liquid process.

Screenings and Grit Disposal Alternatives

Screenings and grit are typically generated during preliminary treatment and hauled off-site for disposal.

Sludge Processing Alternatives

Sludge is a byproduct of secondary/advanced wastewater treatment processes and must be treated properly to avoid odors, reduce disposal costs, and minimize potential risks to human health. The manner in which sludge is treated can have significant impacts on the liquid stream treatment performance and the efficiency of nitrogen removal. This is because of the interdependency of the liquid and solid streams through return flows and recycle streams. Sludge processing alternatives are divided into the following categories:

- Sludge thickening
- Sludge dewatering
- Sludge stabilization and composting
- Sludge disposal

DRAFT

1. **Sludge Thickening**

Sludge thickening is a process to concentrate sludge by removing a portion of the liquid fraction. Sludge thickening reduces transportation and disposal costs and facilitates additional sludge treatment processes, including dewatering and stabilization/composting. Sludge thickening can be accomplished by several processes. The simplest thickening process involves storing sludge in an aerated tank and periodically stopping aeration to allow sludge to settle and excess liquid to be decanted. Other thickening processes utilize equipment such as filters, gravity belts, centrifuges, and rotating drums. Thickening with these types of mechanical equipment (mechanical thickening) often requires a covered process building, odor control facilities, and additional process equipment such as feed pumps and piping. Mechanical thickening also typically requires the addition of chemicals, such as polymer, to condition the sludge and facilitate the thickening process. The Uxbridge WWTF currently uses a gravity thickener to concentrate sludge. Sludge is hauled for off-site disposal at the New England Treatment Company sewage sludge incinerator in Woonsocket, Rhode Island.

2. **Sludge Dewatering**

Sludge dewatering is a physical process used to reduce the water content of thickened sludge. Dewatered sludge, also known as sludge cake, has the consistency of moist sawdust and requires

This document is in draft form. The contents, including any opinions, conclusions or recommendations contained in, or which may be implied from, this draft document must not be relied upon. GHD reserves the right, at any time, without notice, to modify or retract any part or all of the draft document. To the maximum extent permitted by law, GHD disclaims any responsibility or liability arising from or in connection with this draft document.

less volume for storage or transportation to a disposal site. Dewatering processes include belt filter presses, rotary fan presses, centrifuges, and plant and frame presses.

3. **Sludge Stabilization/Composting**

Sludge is stabilized to reduce pathogens, odors, and the potential for the sludge to biologically decay. Sludge stabilization processes can be used prior to or following sludge dewatering. Common sludge stabilization technologies include composting, digestion, alkaline stabilization, and heat treatment and drying.

4. **Sludge Composting**

Composting is a biological sludge stabilization process that destroys pathogens, reduces the water and organic solids content of dewatered sludge, and produces a granular, soil-like material. Sludge composting processes typically include the following three steps:

- Dewatered sludge is mixed with a bulking agent such as wood chips, yard waste, or sawdust.
- The mixture is aerated or regularly mixed, which increases the temperature of the mixture, killing pathogens and degrading the volatile solids of the sludge.
- The composted material is cured and stored for distribution.

Finished compost can be distributed to the public if it meets criteria established by MassDEP regulations. Composting is typically most successful if the sludge to be composted has already been digested; because the material is partially stabilized, there is less potential for generation of odors, and the sludge is easier to handle. Although composting provides a beneficial reuse of sludge, it is usually not cost-effective for low sludge flows. Sludge composting facilities often consist of large covered structures to shelter the compost machinery and odor control facilities. Land areas and capital costs are usually relatively high for composting facilities.

5. **Sludge Digestion**

Digestion is a biological stabilization process that reduces the number of pathogens and the overall solids content of sludge through the use of microorganisms. The microorganisms feed on the organic material in the sludge and are utilized in two types of sludge digestion processes: anaerobic digestion and aerobic digestion. Digested sludge can be dewatered, composted, or disposed of at a regional facility. Anaerobic digestion produces methane gas that can be used as a fuel source.

Anaerobic and aerobic sludge digestion processes typically include two or more large covered tanks. Thickened sludge is fed into the tanks where anaerobic or aerobic microorganisms decompose the sludge. Mixing and aeration equipment is required to improve the digestion process and maintain either an anaerobic or aerobic environment. The digestion process also requires covered buildings to protect process equipment and odor control facilities. Sludge digestion is not cost-effective for small sludge flows.

6. **Alkaline Sludge Stabilization**

Alkaline stabilization is a process in which dewatered sludge is combined with an alkaline material, such as cement kiln dust or lime, to raise the pH, raise the temperature, and reduce the water content of the sludge. Raising the pH and temperature of the sludge creates an environment which is hostile for pathogen growth and reproduction. Alkaline stabilization, like composting, can produce a material that meets MassDEP's requirements for distribution to the public.

DRAFT

This document is in draft form. The contents, including any opinions, conclusions or recommendations contained in, or which may be implied from, this draft document must not be relied upon. GHD reserves the right, at any time, without notice, to modify or retract any part or all of the draft document. To the maximum extent permitted by law, GHD disclaims any responsibility or liability arising from or in connection with this draft document.

The facilities required for alkaline stabilization include enclosed areas for storing alkaline materials, processing the sludge-alkaline material mixture, and storing the final product. Equipment requirements include screw conveyors for transferring the alkaline materials, a mixing unit that combines dewatered sludge and alkaline material, and a drying process for the blended material. Land area requirements and capital and operations costs are comparable to those of a composting facility. Alkaline stabilization is typically not cost-effective for small sludge flows in areas where there is not a strong market for the final product.

7. **Sludge Heat Treatment and Drying**

Heat treatment and drying are thermal stabilization processes that involve heating sludge under pressure to disinfect and dry the sludge. The resulting material is easier to dewater and may be dried to produce a powdered or pelletized product, which can be used as a fertilizer or soil conditioner.

These processes generally have high capital costs, high level of complexity, high energy usage and operation costs, and can be poorly received by the public due to air emissions.

Sludge stabilization has the following advantages:

- Certain processes, such as composting and alkaline stabilization, produce a material that can be distributed to the public, providing a beneficial reuse of the sludge and potential reduction of transportation and disposal costs.
- Processes are often easily expanded to accommodate increased sludge flows.
- These processes produce a sludge that is easy to dispose of because the sludge material is biologically more stable and less likely to decompose and generate odors.
- Anaerobic digestion produces methane gas which, if produced in large enough volumes, can be used as a supplementary energy source.

Sludge stabilization has the following disadvantages:

- Stabilization processes, particularly thermal processes, generate odors and require the construction of odor control facilities.
- High land area requirements to provide space for equipment and materials.
- Composting, alkaline stabilization, and heat treatment alternatives require extensive permitting and monitoring for MassDEP and USEPA approval prior to distribution of the finished material.
- Energy use for mixing and processing equipment would be high, resulting in high O&M costs.
- Requires high level of skill for operation and maintenance of the complex machinery.

8. **Thickening and Disposal at a Regional Facility**

This alternative would involve the transportation and disposal of thickened sludge at a regional facility. Primary and waste activated sludge could either be thickened together or separately. This would require the construction of sludge storage and thickening facilities. The Uxbridge WWTF has an existing gravity thickener that could be reused for this purpose. The thickened sludge would be transported to a regional facility for disposal. Thickened sludge is currently transported to the New England Treatment Company sewage sludge incinerator in Woonsocket, Rhode Island.

This alternative has the following advantages:

DRAFT

This document is in draft form. The contents, including any opinions, conclusions or recommendations contained in, or which may be implied from, this draft document must not be relied upon. GHD reserves the right, at any time, without notice, to modify or retract any part or all of the draft document. To the maximum extent permitted by law, GHD disclaims any responsibility or liability arising from or in connection with this draft document.

- The sewage sludge incinerator in Woonsocket, Rhode Island is approximately 10 miles from the WWTF.
- Minimizes capital costs and equipment operational costs.

This alternative has the following disadvantage:

- Transportation costs for a highly diluted sludge stream.

9. **Sludge Dewatering and Disposal at a Regional Facility**

Using this alternative, the Uxbridge WWTF or a new facility would dewater the sludge and dispose of the sludge cake at a regional facility.

This alternative has the following advantage:

- Sludge stream would be less diluted.

This alternative has the following disadvantages:

- Belt filter presses or centrifuges are the most common and economical dewatering processes, but they are more expensive than simple thickening equipment.
- There are few regional disposal facilities that accept sludge cake and the cost savings with sludge cake disposal do not offset the higher cost to produce it.
- The sludge dewatering process provides a greater potential for release of odors.

10. **Sludge Dewatering, Composting, and Distribution to the Public**

This alternative involves the construction of sludge dewatering and composting facilities, with the primary goal to produce a material that could be distributed to the public. Although it is unknown if there would be sufficient demand for sale of these materials in Uxbridge, experience indicates that the public will pick up and use the material if it is free and of good quality.

Composting and distribution of compost would have the following advantages:

- The Town would not have to pay for sludge disposal.
- Beneficial reuse is provided.
- The Town has more control over sludge disposal and is not dependent on a regional sludge disposal facility.
- Sludge generated and thickened at multiple facilities could be dewatered and composted at one centralized location.

This alternative would have the following disadvantages:

- Construction and O&M costs are typically highest for this alternative.
- Regular sampling, analysis, and reporting to MassDEP is required.
- The potential for odors is increased and adjacent property owners may not welcome this type of process.
- High land area is required.
- It would be necessary to continue to transport sludge to this facility.

DRAFT

This document is in draft form. The contents, including any opinions, conclusions or recommendations contained in, or which may be implied from, this draft document must not be relied upon. GHD reserves the right, at any time, without notice, to modify or retract any part or all of the draft document. To the maximum extent permitted by law, GHD disclaims any responsibility or liability arising from or in connection with this draft document.

11. **Land Application of Sludge**

This alternative involves the thickening and/or dewatering of sludge and subsequent spreading of sludge (in very controlled application rates) onto and into the land. The land is then seeded with an agricultural crop to utilize the sludge's nutrients and turn it into soil material. This type of sludge disposal is common in the Midwestern United States, where there are large farms that welcome the nutrients. It has also been used in other places to produce inexpensive topsoil for the construction of landfill caps.

Screening of Sludge Disposal/Reuse Alternatives

The screening of sludge disposal/reuse alternatives is based on the description provided for each alternative, its advantages and disadvantages, and the screening criteria established in Chapter 2 of this report. A summary of sludge disposal/reuse alternatives and a side-by-side comparison of screening criteria is included in Table 5-3.

Sludge thickening, which is the "Fix it First" alternative, is a relatively simple process with minimal operation, maintenance, and energy requirements and is retained for further evaluation. Thickened sludge can be disposed of at a number of regional facilities. Several of these regional facilities are in close proximity to the Uxbridge WWTF. Sludge from satellite or cluster facilities could also be collected and transported to the existing WWTF for thickening and disposal with the sludge generated at the facility.

Sludge dewatering and disposal at a regional facility is retained for further evaluation due to potential cost savings for transportation of a less diluted sludge.

Sludge composting has high capital and O&M costs due to construction of a covered building, high land area requirements, and the purchase and operation of complicated machinery. Public interest may be high in Uxbridge due to a design to reuse the sludge, but public acceptance is expected to be low due to the potential for odors, visual impacts both during and after construction, and a minimal market for distribution of the finished product.

DRAFT

5.5.8 Odor Control

Introduction

Odorous compounds are present in all wastewaters. Compounds present in fresh wastewaters include skatoles which are organic compounds that give fecal material its distinctive odor. The compounds from wastewaters which generate the greatest number of odor complaints, however, come from conditions in which dissolved oxygen has been depleted from a wastewater, and it has become anaerobic or septic. Under these conditions, anaerobic bacteria metabolize elemental sulfur and sulfates to create hydrogen sulfide and mercaptans (sulfur-based organic compounds which have distinctive odors). There are many locations in which septic conditions can exist, including:

- Force mains with long detention times;
- Sediment deposits in slow moving portions of gravity sewers;
- Un-aerated holding tanks;
- Quiescent conditions, under which oxygen transfer is limited; and
- Sludge processing operations.

This document is in draft form. The contents, including any opinions, conclusions or recommendations contained in, or which may be implied from, this draft document must not be relied upon. GHD reserves the right, at any time, without notice, to modify or retract any part or all of the draft document. To the maximum extent permitted by law, GHD disclaims any responsibility or liability arising from or in connection with this draft document.

Hydrogen sulfide is the most commonly known and prevalent odorous gas associated with wastewater treatment and collection systems. It has a characteristic rotten egg odor, and is corrosive to metals. It is also a precursor to the formation of sulfuric acid, which corrodes concrete, metals, and other materials. Hydrogen sulfide gas is highly toxic, and can pose a safety hazard to sewer and wastewater treatment personnel. Controlling the emission of hydrogen sulfide generated in wastewaters under these conditions is the key to controlling odors from them; hydrogen sulfide is easily detectable in low concentrations. It is hazardous in concentrations a few orders of magnitude higher than the detection limit, and when combined with moisture it creates sulfuric acid.

Odors emanate from various parts of a typical wastewater treatment facility. Some treatment processes have a greater potential for producing odors than others do; however, unit processes that have been found to have the highest odor producing potential are preliminary treatment processes which include grit removal and screening, primary clarification (especially around the effluent weirs), sludge holding tanks, and sludge dewatering. Processes with low odor-producing potential include the activated sludge process aeration tanks, secondary clarifiers, and effluent disinfection.

Existing Infrastructure

The facility currently does not have any odor control. The facility is not in a highly populated area and has never received any odor complaints. In its current configuration septage receiving is the most odorous process at the facility and is the only process that the Town expressed odor concerns about.

The following processes were not identified as being of concern for odors:

- Preliminary treatment – this was not identified as a source of concern
- Primary treatment – this is typically a low source of odors and was not identified as a source of concern
- Sludge storage – sludge thickener odors can be controlled by the addition of plant water to maintain fresh conditions.

DRAFT

Fix It First Alternative

The fix it first alternative is to continue operation without any odor control.

Odor Control Alternatives

1. **Containment**

Enclosures or covers are used to contain odors. Dumpsters, hoppers, and certain types of equipment (such as dewatering equipment) can be enclosed, while tanks and channels are typically covered to contain foul air. Potential enclosure materials include block walls, lightweight fiberglass, or metal; the type of material used for an enclosure is specific to the application. Cover materials that have been used include coated concrete, polyvinyl chloride lined concrete, coated steel, stainless steel, aluminum, plastic, fiberglass, and fabric. Aluminum, fiberglass, and fabric covers are widely used as both tank and channel covers. Aluminum covers are lightweight, UV and weather resistant, and durable (expected to last at least 20 years). Fiberglass covers are also lightweight, UV and weather resistant, but they are more expensive and may be less durable than aluminum covers.

Circular primary clarifiers and gravity thickeners can be covered with either a domed or a flat cover. A domed cover allows access to the clarifier; but since it is considered an occupied space, the

This document is in draft form. The contents, including any opinions, conclusions or recommendations contained in, or which may be implied from, this draft document must not be relied upon. GHD reserves the right, at any time, without notice, to modify or retract any part or all of the draft document. To the maximum extent permitted by law, GHD disclaims any responsibility or liability arising from or in connection with this draft document.

space requires a ventilation rate of twelve air changes per hour (ACH) per NFPA 820 standards. If all equipment is explosion proof, this option would require a high intermittent ventilation rate to accommodate occupancy. In addition to the higher ventilation rate, the total volume of air to be treated increases with a domed roof and thus a larger treatment system is required to treat the air. Although the capital costs of a dome cover may be less than a flat cover, when additional treatment volume is considered, the flat cover system is more cost effective.

A flat cover minimizes the amount of air to be treated from the tank. A flat cover does not allow entry into the tank, which can only be reached through access panels in the cover. Because it is not an occupied space a lower ventilation rate of six ACH can be used.

An alternative to covering and collecting the odorous air is to cover the tanks and provide as tight a seal as possible. This will contain most odors, until the cover is removed for inspection or maintenance at which time the build-up of odors will be released. Covering without collecting/removing the foul air can cause corrosion problems for metals and concrete due to the high concentrations of hydrogen sulfide gas that will accumulate. Thus, special coatings would be required to protect these materials. This practice is not recommended because of the potential for the release of strong odors during tank inspection and maintenance, and the potential for severe corrosion problems.

2. **Collection**

Ducts are used to convey odorous air from the source to the treatment unit. Materials used for ducts, which are large diameter pipes, include stainless steel, fiberglass reinforced plastic (FRP), and plastic. These ducts can be buried or elevated through supports.

Blowers/fans pull air from the odor source and deliver it to the treatment unit. The fans are sized to overcome the headloss in the air piping and in the treatment unit.

3. **Treatment**

The following technologies were considered for odor treatment and are described in detail below:

- Chemical Odor Control
- Packed Tower Scrubber
- Activated Carbon Filter
- Biofilter
- Activated Sludge Diffusion
- Specialty Types

Chemical Odor Control Technologies

Chemical odor control technologies fall into two categories: 1) oxidizers and 2) precipitators. Both of these technologies are discussed in the following paragraphs.

1. **Oxidizers**

Oxidizers are the most common type of odor control chemical. Potassium permanganate, hydrogen peroxide, sodium hypochlorite, and chlorine gas fall into this category. The chemical reactions and descriptions of these compounds are as follows:

DRAFT

This document is in draft form. The contents, including any opinions, conclusions or recommendations contained in, or which may be implied from, this draft document must not be relied upon. GHD reserves the right, at any time, without notice, to modify or retract any part or all of the draft document. To the maximum extent permitted by law, GHD disclaims any responsibility or liability arising from or in connection with this draft document.

Potassium Permanganate. Potassium permanganate is available as a purple, crystalline solid, and oxidizes hydrogen sulfide through many reactions. The following equations represent the lowest and highest consumption rates per unit weight of hydrogen sulfide:

(1) $3H_2S + 2KMnO_4 = 3S + 2H_2O + 2KOH + 2MnO_2$

(2) $3H_2S + 8KMnO_4 = 3K_2SO_4 + 2KOH + 2H_2O + 8MnO_2$

Generally, several reactions between the two extremes may occur, yielding elemental sulfur, as in Equation 1; though thionates, dithionates, and manganese sulfate are other possible sulfur chemicals created, depending upon the characteristics of the particular waste stream. The lb/lb ratio of $KMnO_4$ to H_2S in Equation 1 is 3:1. In Equation 2, the ratio is 12.4:1.

Potassium permanganate is such a strong oxidant that it tends to react with any oxidizable substance, for instance, leaving little or no residual to react with sulfides as they are formed.

The advantages of potassium permanganate:

- No tankage required for storage.
- Can be transported in standard cars or trucks.
- Easily measured, mixed, and applied to odor-producing areas.
- Reacts quickly and thoroughly with water-borne sulfides.

The disadvantages of potassium permanganate are:

- High chemical cost per pound of hydrogen sulfide consumed.
- Effects of sulfide reduction are local: little residual effect downstream of application point.

Hydrogen Peroxide. Hydrogen peroxide is generally available in a 50 percent solution. It oxidizes sulfides to elemental sulfur, which is insoluble in water.

$H_2O_2 + H_2S = 2H_2O + S$

In addition to oxidizing sulfides, hydrogen peroxide also oxidizes organic compounds, such as mercaptans, reducing odor emissions. Hydrogen peroxide is such a strong oxidant that it tends to react with any oxidizable substance as it is introduced into a waste stream.

The advantages of hydrogen peroxide are:

- No chemical residuals.
- Small amounts of additional sludges produced when compared with precipitants.
- Moderate cost per pound of hydrogen sulfide consumed.

The disadvantages of hydrogen peroxide are:

- Special precautions required for storage.
- Effects of sulfide reduction are local: little residual effect downstream of application point.
- Chemical is very hazardous.
- Maintenance and repair of hydrogen peroxide systems require special training (most of the time, work is contract-operated by suppliers.)

DRAFT

This document is in draft form. The contents, including any opinions, conclusions or recommendations contained in, or which may be implied from, this draft document must not be relied upon. GHD reserves the right, at any time, without notice, to modify or retract any part or all of the draft document. To the maximum extent permitted by law, GHD disclaims any responsibility or liability arising from or in connection with this draft document.

Sodium Hypochlorite. Sodium hypochlorite is available in solution, with the most common concentration being 13 percent as available chlorine. It oxidizes hydrogen sulfide through the following reactions:

- Dissociation of sodium hypochlorite in water into sodium hydroxide and hypochlorous acid

  NaOCl + H2O = Na+ + OH- + HOCl

- Oxidation of sulfur

  8Na+ + 8OH- + 8HOCl + H2S = 8NaCl + 6H2O + $SO4^{2-}$ + 6OH-

Theoretically, the lb NaOCl/lb H_2S stoichiometric ratio is 17.5:1; however, consumption of sodium hypochlorite by organic compounds present in the solution may increase the dosage ratio to 22:1 for complete oxidation of H_2S.

The advantages of sodium hypochlorite are:

- Highly effective as long as there is sufficient residual.

The disadvantages of sodium hypochlorite are:

- High expense per pound of hydrogen sulfide consumed.
- Requires additional tankage.
- Sodium hypochlorite loses its strength over time by releasing chlorine gas.

Chlorine Gas. Chlorine gas is a very strong oxidant and is typically used in water and wastewater disinfection processes. Chlorine gas is generally stored in gas form and dissolved in aqueous solution before application. Chlorine acts to oxidize hydrogen sulfide in the following manner:

$$HS^- + 4Cl_2 + 4H_2O = SO_4^{-2} + 9H^+ + 8Cl-$$

In accordance with the above equation, 8.3 pounds of chlorine is required for each pound of H_2S oxidized. However, due to interferences with other compounds, the ratio is typically slightly higher.

The advantages of chlorine gas are:

- Highly effective and very strong oxidant.
- Kills sulfate-reducing bacteria.

The disadvantages of chlorine gas are

- Chlorine gas is very dangerous and can be lethal.

2. **Precipitators**

The most common precipitators are iron salts: 1) ferrous sulfate and 2) ferric chloride. These are the least expensive of the chemicals used for sulfide control and are a byproduct of the steel finishing industry. They precipitate H_2S as ferrous sulfide. By taking dissolved oxygen from solution, the second part of each reaction creates ferrous hydroxide, which settles more readily.

- Ferrous sulfate $H_2S + FeSO_4 = FeS + H_2SO_4$
- Ferrous chloride $H_2S + FeCl_2 = FeS + 2HCl$

The reactions are similar for ferric chloride and ferric sulfate. The reactions are pH dependent and can reverse, releasing H_2S from solution if the pH becomes slightly acidic. Generally, the buffering capacity of wastewaters prevents this from occurring.

DRAFT

This document is in draft form. The contents, including any opinions, conclusions or recommendations contained in, or which may be implied from, this draft document must not be relied upon. GHD reserves the right, at any time, without notice, to modify or retract any part or all of the draft document. To the maximum extent permitted by law, GHD disclaims any responsibility or liability arising from or in connection with this draft document.

If all the ferrous sulfate is not removed in primary settling, additional oxygen will be required to convert the remaining ferrous sulfate to ferric hydroxide. The process may deplete dissolved oxygen and can create a problem by creating a greater oxygen demand. If a surplus of iron salts is available, the reaction will continue as more H2S is produced by the anaerobes in the sewage, up to the point that all of the iron salts are used.

The advantages of iron salts are:

- Least expensive of all sulfide-consuming compounds.
- Iron sludges can enhance settling properties of existing sludges.

The disadvantages of iron salts are:

- Requires additional tankage and building for tank protection.
- Creates additional sludge for disposal.
- Corrosive to ferrous metals.
- Maximum practical reduction of hydrogen sulfide down to 1 mg/L in solution.
- Can result in excessive BOD removal in primary settling tanks which will impact BNR processes if overdosed.

Packed Tower Scrubbers

Packed tower scrubbers consist of an FRP or PVC tower, filled with plastic packing. A chemical solution is evenly spread over the top of the tower packing while the odor-laden air is introduced into the bottom of the tower and flows up, against the flow of the solution. The solution is a combination of a caustic (sodium hydroxide) and an oxidant (sodium hypochlorite). The caustic raises the pH of the solution, which increases its tendency to bring hydrogen sulfide and other odorous compounds into solution, and the odorous compounds are oxidized by the sodium hypochlorite. Solution is re-circulated back to the top of the scrubber. The pH is monitored to control the wasting rate of old solution and the addition of new solution. For the removal of ammonia gas, water is injected into a packed tower scrubber to force the ammonia into solution. All liquid waste products are typically sent back to the head of the plant for treatment.

Packed tower scrubbers are best for high strength odors. When they are used for low strength odors, the low strength odor may be replaced with a chlorine odor which, depending on the situation, may be nearly as objectionable as the original low strength odor. Therefore the technology is best suited for odors with an ED50 (Effective Dosage at 50th percentile) greater than 100.

The advantages of packed tower scrubbers are:

- Treats only the sulfides and other odorous compounds released to the air rather than the total sulfide content of the waste stream. Uses less chemical than waste stream treatment of sulfides.
- Able to treat stronger odors than either soil compost filters or activated carbon adsorbers.
- More space efficient than soil compost filter or tankage for liquid chemical feed.
- Does not need to be taken down for periodic regeneration or element replacement.

The disadvantages of packed tower scrubbers are:

- Not effective on low strength odors.

DRAFT

This document is in draft form. The contents, including any opinions, conclusions or recommendations contained in, or which may be implied from, this draft document must not be relied upon. GHD reserves the right, at any time, without notice, to modify or retract any part or all of the draft document. To the maximum extent permitted by law, GHD disclaims any responsibility or liability arising from or in connection with this draft document.

- May give off slight chlorine odor.
- Requires heated area for chemical storage and sump.
- Not effective on odorous compounds which are not water soluble.

Activated Carbon Filters

Activated carbon filters remove odorous compounds from incoming air through adsorption. For the case of air containing high concentrations of hydrogen sulfide (5 mg/L or more), a caustic is added to the carbon to remove the hydrogen sulfide and prevent it from using all the adsorption sites on the carbon. The carbon must be regenerated periodically, or replaced if economics dictate. Life span is generally three months to a year for the carbon in a properly sized unit. However, unusually strong odors may considerably shorten the life of a carbon charge.

The advantages of activated carbon adsorbers are:

- Very effective on low strength odors.
- No chemical storage or feed required (except for regeneration.)
- Radial flow design requires small footprint.

The disadvantages of activated carbon adsorbers are:

- May not be effective on large-chain odor molecules.
- Requires periodic regeneration or replacement of activated carbon charge.
- High-strength odors may shorten the life of the carbon.

Biofilter

In a biofilter, odorous air flow passes through a media that supports biologically active organisms. Organisms specific for the degradation of the specific odorous compounds accumulate on the media and multiply. The biofilter can either be made of soil amended with compost to remove odors or a manufactured system that utilizes an inorganic media.

The process is more complex than any of the previously mentioned devices because, in addition to adsorption of odorous compounds by the media, odors are also removed biologically. Microbes inhabiting the media bed metabolize the odor-producing compounds adsorbed on the filter particles. To maintain the biological process, several parameters such as moisture content, pH, and bed density must be maintained within relatively narrow ranges. Moisture content is the most important parameter because if the bed is too dry, adsorption will not be possible and the biota will not survive; and if too wet, anaerobic conditions will be present in the bottom of the filter and it may become a source of odors itself. Biofilter leachate is collected and sent to the head of the plant for treatment.

There are two basic types of biofilter: 1) soil compost units and 2) pre-engineered units. Construction of a soil compost filter is fairly simple. It consists of a header and distribution ducts surrounded by crushed stone with approximately three feet of soil amended with compost, covered with chipped wood or bark to retard moisture escape.

The lifespan of a soil compost biofilter is approximately three to five years, after which the soil-compost amendment should be replaced. The ultimate determination of replacement time is by either increased headloss through the filter or by reduced effectiveness of the filter.

DRAFT

This document is in draft form. The contents, including any opinions, conclusions or recommendations contained in, or which may be implied from, this draft document must not be relied upon. GHD reserves the right, at any time, without notice, to modify or retract any part or all of the draft document. To the maximum extent permitted by law, GHD disclaims any responsibility or liability arising from or in connection with this draft document.

The media in a manufactured or pre-engineered biofilter does not typically need to be replaced but does need to be supplemented with additional nutrients.

The advantages of biofilters are:

- Very simple technology.
- Very effective with low strength odors

The disadvantages of biofilters are:

- Requires large ground area for construction, except for pre-engineered units.
- Relatively sensitive to variations in pH and moisture.
- May not be suitable for very strong odors.
- Effectiveness decreases at low temperatures.

Activated Sludge Diffusion

In activated sludge diffusion the odorous air is piped, by ductwork to the WWTFs existing activated sludge tanks. Before the air enters the activated sludge tanks it needs to be pretreated through a series of filters and a moisture removal mechanism. The air then enters the tanks through diffusers, helping offset some of the air that is introduced to the system for aeration. An additional odor treatment system may also have to be implemented at the WWTF if the amount of odorous air is greater than what the activated sludge tanks can accept (especially when minimum air requirements are considered).

Specialty Types

There are various types of specialty odor control units. Purafil, for example, is a dry scrubber that converts odorous compounds into salts via chemisorption. This type of unit is commonly found in small installations such as at individual pump stations.

Screening of Alternatives

The installation of a bio-filter at septage receiving (and any other process that may be deemed to require odor control in the futue)) is recommended for further evaluation due to its effectiveness with low strength odors, simplicity and cost effectiveness.

5.5.9 Pump Station Alternatives

Existing Infrastructure

The existing collection system has five pump stations. The Main Pump Station, West River Pump Station, and Liberty Estates Pump Station are owned and operated by the Town. The former two were both constructed in the 1970's and have mechanical equipment well past its useful life. In addition, the West River Pump Station is in a 100 year flood zone.

Though the Town does not own either the Taft School or High School Pump Station, they provide monitoring services for both of them.

Alternatives for the two pump stations with identified needs are discussed below.

"Fix it First" Alternative

1. **Main Pump Station**

This document is in draft form. The contents, including any opinions, conclusions or recommendations contained in, or which may be implied from, this draft document must not be relied upon. GHD reserves the right, at any time, without notice, to modify or retract any part or all of the draft document. To the maximum extent permitted by law, GHD disclaims any responsibility or liability arising from or in connection with this draft document.

The mechanical equipment is well past its useful life and needs to be replaced. However the building was found to be in good condition and could be reused. Reusing the existing building and replacing the mechanical equipment is recommended for further evaluation.

2. **West River Pump Station**

The mechanical equipment is well past its useful life and needs to be replaced. Additionally the structural integrity of the steel entrance tube is not known. During a flooding event water was observed entering the wet well through conduits and rising around the station to within a couple inches of the top of the entrance tube. Water also flooded the nearby Highway Department Building which houses the pump stations emergency generator and electrical equipment. Due to the unknown structural condition of the entrance tube, the "Fix it First" alternative of replacing the mechanical equipment in the station is not recommended for further evaluation.

West River Pump Station Alternatives

Since the structural integrity of the entrance tube is not known, replacing the mechanical equipment within the existing structure is not recommended for further evaluation.

The existing station is a wet pit/dry pit pump station. The station could either be replaced in kind or with another type of station, such as a suction lift station. The entrance tube to the new station will need to be designed to provide adequate freeboard in the 100 year floods zone. Additionally the electrical equipment and generator, currently in located in the Highway Department Building, need to be relocated out of the 100 year flood zone.

5.5.10 Screening of Alternatives

Main Pump Station

The "Fix it First" alternative is recommended for further evaluation.

West River Pump Station

Replacing the West River Pump Station in its entirety is recommended for further evaluation.

Liberty Estates Pump Station

The "Fix it First" alternative is recommended for further evaluation.

5.6 Satellite Wastewater Treatment

Satellite wastewater treatment facilities are typically designed to treat and discharge wastewater flows greater than 10,000 gpd and are typically of a size less than 300,000 gpd. These treatment systems serve many properties and require a wastewater collection system, as well as a treated water recharge system.

Satellite treatment facilities typically utilize processes that are compact in size and more mechanized than individual and multiple-home, on-site-type systems. These facilities can provide treatment that meets the Class I permitted standards of 30 mg/L BOD_5, 30 mg/L TSS, and 10 mg/L nitrate-N. They typically produce average total nitrogen concentrations in the 5 to 7 mg/L range. When properly designed and operated, they can provide even better treatment.

A satellite treatment facility typically incorporates aspects of both the individual home I/A systems and the larger scale centralized processes. A satellite system can either scale up an individual-

DRAFT

This document is in draft form. The contents, including any opinions, conclusions or recommendations contained in, or which may be implied from, this draft document must not be relied upon. GHD reserves the right, at any time, without notice, to modify or retract any part or all of the draft document. To the maximum extent permitted by law, GHD disclaims any responsibility or liability arising from or in connection with this draft document.

home I/A technology for a larger flow scheme, or scale down one of the processes discussed in this chapter for a slightly smaller flow.

Since no concentrated, problematic areas for on-site wastewater disposal were identified in the Draft Needs Assessment Report it was concluded that the most cost-effective wastewater alternatives for properties not currently on the centralized system are to continue to utilize individual on-site wastewater disposal systems or to connect to the centralized system if the property is within close proximity of the existing sewer system (infill properties). However general indicators for potentially unsuitable areas for on-site wastewater disposal do exist. If, during future development, a concentrated area unsuitable for on-site wastewater disposal is identified, a satellite wastewater treatment facility could be considered.

5.6.1 Regulatory Impacts and Treatment Standards

Wastewater discharges greater than 10,000 gpd require a groundwater discharge permit under the Massachusetts Groundwater Discharge Permit Program and the Reclaimed Water Permit Program and Standards described in 314 CMR 5.00 and 20.00, respectively. These regulations were discussed in the Draft Needs Assessment Report. *"Guidelines for the Construction, Operation, and Maintenance of Small Treatment Facilities with Land Disposal"* have been published by MassDEP specifically governing these types of treatment facilities. These guidelines provide detailed design criteria for treatment and discharge facilities.

5.6.2 System Components for Satellite Wastewater Treatment Facilities

Several system components are common to all satellite wastewater treatment facilities. These components are required by MassDEP's design guidelines or are required as part of a well-equipped treatment facility that can be easily operated and maintained during its design life. The main components of a satellite wastewater treatment facility are very similar to the components necessary for a larger municipal (centralized) facility and are briefly described below.

Primary Clarifiers

Primary clarifiers are settling tanks that reduce the organic loading to the treatment process by removing settleable solids and floatable material. The raw wastewater flows through the clarifier (typically large septic tanks for satellite wastewater treatment facilities) and the solids settle to the bottom, where they are collected and removed for disposal. MassDEP's design guidelines require the installation of primary clarifiers on all small wastewater treatment facilities (some suspended growth processes, such as an SBR, may be an exception to this requirement).

Flow Equalization

Flow equalization is required to provide steady and relatively consistent daily wastewater flows and associated loadings to a satellite wastewater treatment facility. A flow equalization tank stores the variable flows that occur periodically during the day, and equalization pumps convey a relatively constant flow from the equalization tank to the biological treatment process.

Biological Nitrogen Removal

This process utilizes a large concentrated population of microorganisms to treat the wastewater. As discussed previously, these processes are categorized by the physical configuration used to promote microbial growth, such as suspended growth, attached growth, or a combination. Similar to larger municipal facilities, satellite treatment facilities may require chemical addition to accomplish the biological processes.

DRAFT

This document is in draft form. The contents, including any opinions, conclusions or recommendations contained in, or which may be implied from, this draft document must not be relied upon. GHD reserves the right, at any time, without notice, to modify or retract any part or all of the draft document. To the maximum extent permitted by law, GHD disclaims any responsibility or liability arising from or in connection with this draft document.

Secondary Clarifiers

Secondary clarifiers are an integral component of some of the more common fixed-film and suspended growth nitrogen removal processes. These clarifiers are used to separate the biological solids (sludge) from the treated water, and they operate similarly to the previously described primary clarifiers.

Effluent Filtration

This is typically required by MassDEP following the biological nitrogen removal process. This process filters the treated water to remove most remaining particulate matter. The facilities include sand or other media filters and the necessary pumps and reservoirs to periodically backwash the filters and pump the dirty backwash water back to the biological treatment process. Depending on the technology/process chosen, effluent filtration is provided as part of the standard design or is not required due to the treatment process.

Effluent Disinfection

Disinfection may be required prior to recharging the treated water to the groundwater. Disinfection can be accomplished by any of the disinfection methods discussed previously. Disinfection is not typically required when subsurface leaching fields are used for recharge unless it occurs within a Zone II. Disinfection may be required when sand infiltration beds (open to the atmosphere), well injection, or recharge to a surface water body are used.

Treated Water Recharge

As with any treatment system, whether individual on-site systems, cluster systems, satellite systems, or large municipal systems, treated water needs to be recharged somewhere. Two methods are commonly used, including sand infiltration beds and subsurface leaching, although there are other options that are discussed in detail in Chapter 6. When sand infiltration beds are used, the treated water is piped to a sand bed, where the water percolates into the ground through the open sand surface. Maintenance of the beds is relatively easy and solids can be removed from the top of the sand beds. When subsurface leaching is used, the water is piped to a subsurface perforated drain field, where it percolates into the ground. Maintenance of these systems is more difficult because the leaching field is not exposed to the surface and solids cannot be easily removed. Leaching fields have the advantage of being able to be located under a parking lot or other large open area that may have another use; therefore, it could potentially require little or no additional space. The selection of treated water recharge facilities must be performed on a site-by-site basis.

Support Structures

An operations building is required to shelter process equipment, store supplies, and operate and maintain the various treatment processes.

5.6.3 Biological Nitrogen Removal Processes

Biological treatment processes are divided into two general classifications: suspended growth processes and attached film processes. A third classification, especially for satellite treatment facilities, involves a combination of one of the two processes with a physical process such as filtering. Plant based wastewater treatment systems can also be considered for satellite treatment facilities.

DRAFT

This document is in draft form. The contents, including any opinions, conclusions or recommendations contained in, or which may be implied from, this draft document must not be relied upon. GHD reserves the right, at any time, without notice, to modify or retract any part or all of the draft document. To the maximum extent permitted by law, GHD disclaims any responsibility or liability arising from or in connection with this draft document.

Suspended Growth Biological Wastewater Treatment

Suspended growth processes use the concentrated microorganism population suspended in the wastewater via mechanical mixing or injection of compressed air. Carbonaceous removal, nitrification, and denitrification are accomplished in one or more tank compartments during the process, and the microorganisms are settled from the wastewater to be reused in the process or are removed for disposal. Typical suspended growth processes for satellite treatment facilities include general processes such as sequencing batch reactors or activated sludge processes.

Attached Growth (Fixed Film) Biological Wastewater Treatment

Fixed-film processes utilize a concentrated microbial population that adheres to a supporting media. The wastewater is circulated through tank compartments that contain the microorganism-coated media. At the end of the process, the wastewater is typically settled or filtered to remove any microorganisms that have sloughed from the media. Typical fixed-film processes for satellite treatment facilities include rotating biological contactors, recirculating sand filters, wood chip filters and I/A systems such as Bioclere®, Amphidrome®, and FAST systems. Descriptions of the majority of these technologies have been presented in Chapters 4 and 5. A description of wood chip filters and the Amphidrome System® is provided below:

1. **Wood Chip Filters**

Wood chip beds are a new approach to denitrifying filters that was developed for individual on-site systems but have since been used for a small number of small treatment plant applications. They are comprised of wood chips (or other forms of waste wood) impregnated with alkaline material. They do not need supplemental carbon addition because the wood chips provide the organic carbon for the denitrifying bacteria. Similar to other filters, they can provide a high level of nitrogen removal. Unlike other denitrifying filters, they do not provide much process control with respect to backwash or organic carbon feed rates. The wood chip beds do need to be replaced after time and because they are such a new and developing technology, the replacement time is unknown (10 to 20 years has been estimated). They include the proprietary system NITREX®.

Denitrifying filters have the following advantages:

- Reliable technology to meet a total nitrogen limit of 3 mg/L.
- Familiar technology, as it is similar to other types of effluent filters.
- No significant environmental or public acceptance concerns.
- Potential for air emissions is minimal, as filters are typically enclosed in buildings.

They have the following disadvantages:

- Moderate capital costs for new facilities and building enclosures.
- High O&M costs.
- Large headloss, necessitating pumping of effluent.
- Methanol addition and stripping are required for all but the wood chip filters.
- Wood chip filters provide little process control.

2. **Amphidrome® Process**

The Amphidrome® process is an attached growth, sequencing batch-type process designed for nitrogen removal at small treatment facilities. It uses relatively complex controls to circulate the

DRAFT

This document is in draft form. The contents, including any opinions, conclusions or recommendations contained in, or which may be implied from, this draft document must not be relied upon. GHD reserves the right, at any time, without notice, to modify or retract any part or all of the draft document. To the maximum extent permitted by law, GHD disclaims any responsibility or liability arising from or in connection with this draft document.

water being treated back and forth through filter media as aerobic and anoxic conditions are being cycled. Figure 5-19 illustrates the configuration of this process.

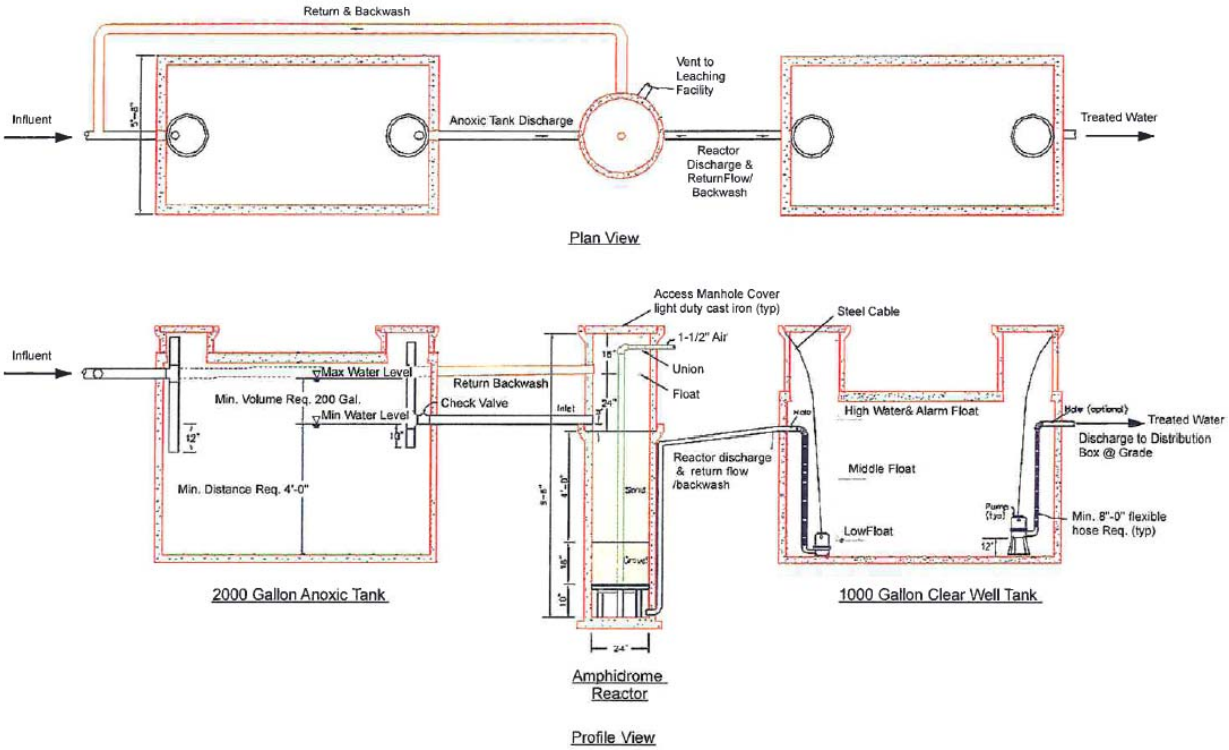

Figure 5-19 Amphidrome® System

The Amphidrome® process has the following advantages:

- No final settling tanks are required.
- Tanks are typically placed below ground; therefore, visual impacts are minimal.
- Allows secondary treatment and nitrogen removal in a single reactor.
- Potential for air emissions is minimal, as filters are enclosed and below ground.

The Amphidrome® process has the following disadvantages:

- It is a relatively new treatment configuration and there are few large installations to assess long-term performance.
- Large headloss and below-grade installation requires effluent pumping.
- Treatment flow is complicated and relies on automatic controls.

Plant-Based Wastewater Treatment Systems

1. **Hydroponic Systems**

Hydroponic systems involve the use of marshes, sunlight and naturally occurring plants, and bacteria and fish to remove nitrogen. Such systems are experimental and would need pilot testing. These systems have not yet demonstrated that a high level of nitrogen removal can be reliably achieved on a large or long-term scale. Approval of such systems by regulatory agencies at this stage of development is unlikely without extensive pilot testing.

This document is in draft form. The contents, including any opinions, conclusions or recommendations contained in, or which may be implied from, this draft document must not be relied upon. GHD reserves the right, at any time, without notice, to modify or retract any part or all of the draft document. To the maximum extent permitted by law, GHD disclaims any responsibility or liability arising from or in connection with this draft document.

2. **Constructed Wetlands**

Constructed wetlands consist of an artificial biofilter (receiving water and vegetation) to treat surface and subsurface water flow. Vegetation used in treatment includes duckweed, water hyacinths, cattails, rushes, and reeds. Vegetation must be harvested to efficiently manage the system. Removal and disposal of the vegetation is a significant consideration in the design and operation of the wetland systems. Backup systems are required due to natural seasonal and decay cycles and to provide active treatment sites while harvesting. Treatment efficiency in northern climates may be subject to seasonal variations, thereby necessitating large storage basins. A diagram of a constructed wetland system is shown in Figure 5-20.

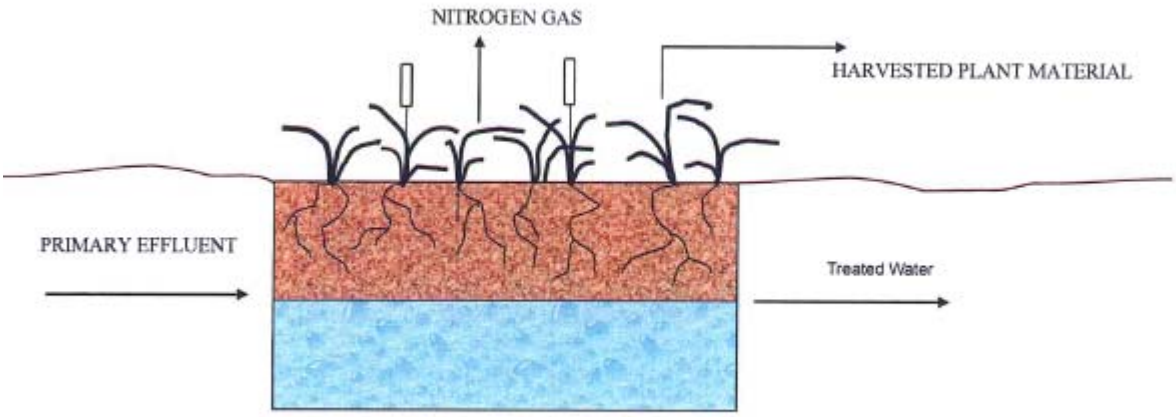

Figure 5-20 Constructed Wetlands

3. **Solar Aquatics**

Solar aquatic systems utilize greenhouses, fish tanks, wetlands, etc. for wastewater treatment. Wastewater is first allowed to settle to remove large solids and is then treated in stages with different types of living organisms, usually plants or algae. Sunlight is required to supply light to the plants and heat for the overall system. The final effluent is then discharged to a leaching area. A diagram of a solar aquatics system for large wastewater flows is included as Figure 5-21. Energy requirements are the main disadvantage when compared with other plant and biological systems.

This document is in draft form. The contents, including any opinions, conclusions or recommendations contained in, or which may be implied from, this draft document must not be relied upon. GHD reserves the right, at any time, without notice, to modify or retract any part or all of the draft document. To the maximum extent permitted by law, GHD disclaims any responsibility or liability arising from or in connection with this draft document.

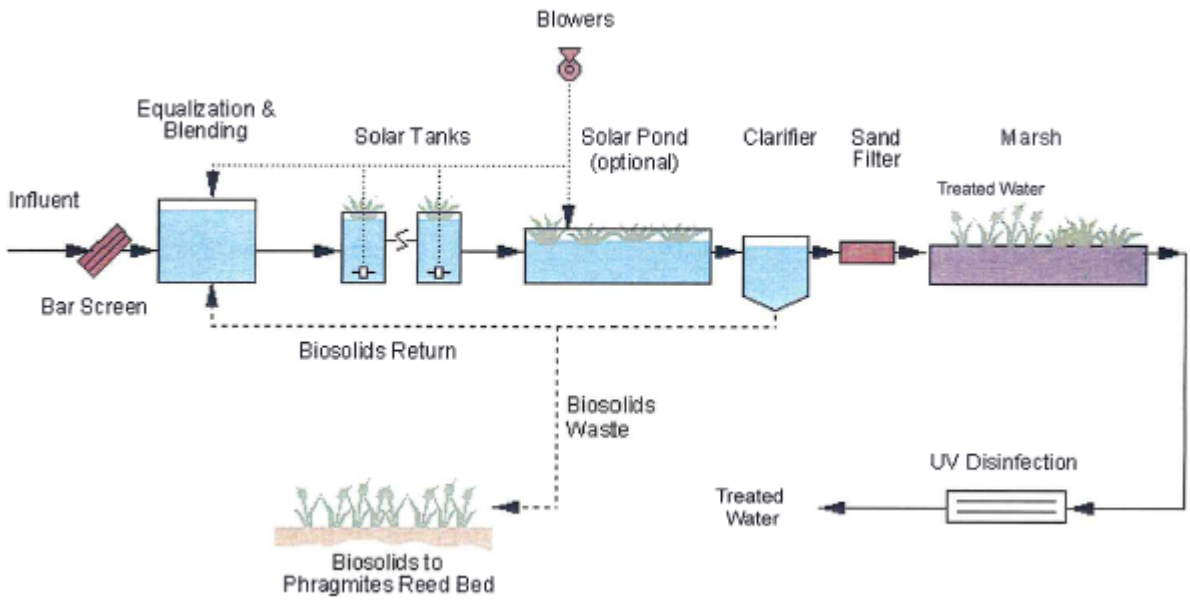

Figure 5-21 Solar Aquatic Systems

4. **Lagoons**

Lagoons are lined aerated ponds and could be considered for nitrification; however, they have a number of inherent limitations. Typically, lagoons have a detention time of several days; consequently, they are too large to be well mixed and active microorganisms are deposited on the bottom of the lagoon. There is insufficient contact of the nitrifiers with wastewater to obtain efficient nitrification.

Cold weather operation results in reduced performance due to decreased microbial activity. With long detention times, lagoon temperatures are less than those for activated sludge processes. Mixing and recirculation of effluent can be provided to improve performance; however, a large land area is required, and public nuisances and odors are a concern.

An aerated lagoon cannot be used for denitrification; therefore, a second process would be required following the lagoons.

Facultative lagoons with algal harvesting have the potential to remove nitrogen. The surface layers must be aerobic to achieve nitrification and the bottom layers and deposits must be anoxic or anaerobic to achieve denitrification. The algal biomass must be removed from lagoon effluent or will increase effluent solids levels above permit limits, necessitating effluent filtration or other effluent polishing steps. Solids accumulations in the bottom of the lagoon and pass-through of solids in final effluent have been a recurring problem with such systems in the part. A major design concern is operation in winter in northern climates due to the reduction in microbial activity and lack of process control to manage the system.

Plant and biological treatment systems have the following advantages:

- Appropriate for small rural communities.
- Typically require little operational control.
- Relies on use of natural ecosystems.

DRAFT

This document is in draft form. The contents, including any opinions, conclusions or recommendations contained in, or which may be implied from, this draft document must not be relied upon. GHD reserves the right, at any time, without notice, to modify or retract any part or all of the draft document. To the maximum extent permitted by law, GHD disclaims any responsibility or liability arising from or in connection with this draft document.

- Minimal energy requirements (except for Solar Aquatics).
- Processes can have high public acceptance and appeal due to their use of plant material.

Plant and biological treatment systems have the following disadvantages:

- Large land area requirements due to long wastewater retention times.
- Cold weather performance is questionable.
- Design information and performance data are limited.
- Nitrogen removable efficiency is not readily predictable or controllable.
- Harvesting and disposal of vegetation is required.
- Prefiltration or effluent polishing may be required.
- Pilot testing may be required.

The advantages and disadvantages for the various systems and processes were discussed either previously in this chapter or in Chapter 4. The same advantages and disadvantages discussed in those sections would also apply here.

5.6.4 Residual Treatment and Disposal for Satellite Treatment Facilities

Satellite wastewater treatment facilities typically do not have sludge treatment or processing facilities. Liquid sludge is usually transported off site for treatment and disposal at a larger facility. The Uxbridge WWTF would be the probable destination for the sludge produced by a new small wastewater treatment facility, or the sludge could be shipped directly to a regional disposal facility such as Woonsocket, Rhode Island. A small quantity of screenings could be produced at a small wastewater treatment facility, and these screenings would be expected to be disposed of as a special waste in a regional landfill.

DRAFT

5.6.5 Sizing and Land Area Considerations for Satellite Treatment Facilities

The land area required for a satellite wastewater treatment facility is determined by three primary factors:

1. Land area needed for process equipment and operations building.
2. Land area needed for treated water recharge facilities, such as sand infiltration beds or leaching beds.
3. The necessary buffer area to visually screen the facility from neighboring properties.

The land area of the process equipment and operations buildings is approximately the same for the different biological nitrogen removal processes identified. The RBC process may require slightly more area and the SBR process may require slightly less area, but these incremental increases are small when compared to the land area requirements for treated water recharge facilities and buffer area. Treated water recharge area requirements are based on the use of sand infiltration beds that require the least space and are the easiest to maintain. Subsurface leaching beds typically have a larger area requirement, but may have an advantage if they can be located under a parking area or other open space that has a multiple use. The buffer areas required for a particular small wastewater treatment facility will depend on the site selected and the neighboring properties. The buffer areas estimated are based on a separation distance of 100 feet between the property boundary and the process facilities. This separation distance is greater than the distances required

This document is in draft form. The contents, including any opinions, conclusions or recommendations contained in, or which may be implied from, this draft document must not be relied upon. GHD reserves the right, at any time, without notice, to modify or retract any part or all of the draft document. To the maximum extent permitted by law, GHD disclaims any responsibility or liability arising from or in connection with this draft document.

by MassDEP's guidelines, but would allow space for a driveway access and sufficient planting to provide a visual screen from adjoining properties. Even greater space is often needed to gain approval from neighboring residential properties.

5.6.6 Evaluation of Satellite Wastewater Treatment for Use in Uxbridge

As documented in the Draft Needs Assessment Report, conventional Title 5 systems are expected to continue to provide adequate treatment for the portion of the Town that is not connected to the centralized collection system. The remainder of the technologies summarized in this section should be considered only if, during future development in the Town, concentrated areas are found to be unsuitable for on-site wastewater disposal through a conventional Title 5 system.

5.6.7 Identification of Wastewater Treatment Sites

Satellite treatment systems receive wastewater flow from many properties and would need to be sited in the neighborhoods and/or regions of the town that they serve. They may recharge the treated water at the same site where they are located or they could pump the treated water to a remote infiltration site.

The Draft Needs Assessment Report did not identify any concentrated, problematic areas for on-site wastewater disposal that may require a satellite system.

5.7 Alternatives for Treatment System Expansion and Upgrade at the Uxbridge WWTF

DRAFT

As discussed in the Draft Needs Assessment Report, the Uxbridge WWTF was originally designed to provide treatment for a maximum monthly average wastewater flow of 2.5 million gallons per day and a peak hourly flow of 6.6 million gallons per day. Although this hydraulic capacity is adequate to meet the Town's projected wastewater treatment capacity needs through the year 2035, the facility was not designed to provide the degree of wastewater treatment necessary for consistent and reliable compliance with new effluent limits for total nitrogen and total phosphorus that have been added to the facility's discharge permit.

The new effluent limits will require additional wastewater treatment to reduce the maximum monthly average concentration of total nitrogen in the WWTF effluent to 8 milligrams per liter or less during the period of May 1 through October 31. For consistent and reliable compliance with the total nitrogen limit, the facility should be designed to provide year-round nitrification (ammonia removal). The reason for this is to avoid the need to reestablish nitrification in advance of the May 1 start date for nitrogen removal. Reestablishing nitrification in advance of May 1 would require an extended period of time due to the significant impact that cold wastewater temperatures have on the growth rate of bacteria responsible for nitrification.

In addition, the new permit effluent limits also require additional treatment to reduce the maximum monthly average concentration of total phosphorus in the WWTF effluent to 0.2 milligrams per liter or less during the period of April 1 through October 31. Consistent and reliable compliance with this limit will require a high degree of solids removal in addition to a significant increase in chemical addition for precipitation of phosphorus, which is largely present in soluble (dissolved) form in municipal wastewater.

Based on the screening criteria presented in Chapter 2, the following alternatives are recommended for further evaluation.

This document is in draft form. The contents, including any opinions, conclusions or recommendations contained in, or which may be implied from, this draft document must not be relied upon. GHD reserves the right, at any time, without notice, to modify or retract any part or all of the draft document. To the maximum extent permitted by law, GHD disclaims any responsibility or liability arising from or in connection with this draft document.

Centralized Treatment

Preliminary Treatment

- Replacement of grinder and coarse bar screen with two fine screens and replacement of all other mechanical equipment that is well past its useful life

Primary Treatment

- Replace mechanical equipment well past its useful life in kind.

Secondary/Advanced Treatment

- A conventional approach that utilizes a suspended growth biological wastewater treatment process, such as the Modified Ludzack-Ettinger (MLE) or Bardenpho process (4-stage or 5-stage), coupled with dual point chemical addition for phosphorus removal and tertiary effluent filtration for enhanced solids removal. This approach is similar to the activated sludge process currently provided at the Uxbridge WWTF, but will require expanding the aeration tank volume and configuring the tanks to create "swing" zones that may be used as pre-anoxic zones during the portion of the year when nitrogen removal is required and as aerobic zones during the portion of the year when nitrogen removal is not required. In addition, because nitrogen and phosphorus removal has an adverse impact on the settling characteristics of the mixed liquor, the hydraulic and solids handling capacity of secondary clarifiers is typically less. Fortunately, the Uxbridge WWTF was designed with provisions for adding one additional secondary clarifier of similar size to the three existing clarifiers. For planning purposes, detailed evaluation of the alternatives will be based on costs for upgrade of the Uxbridge WWTF to an MLE process configuration. Based on the size of the existing aeration tanks and current site constraints, the MLE process configuration appears more suitable for the Uxbridge WWTF.
- An integrated fixed-film activated sludge (IFAS) approach that utilizes fixed-film media (fixed or floating) within the reactors (aeration tanks) to enhance biological treatment for nitrogen removal coupled with dual point chemical addition for phosphorus removal and tertiary effluent filtration for enhanced solids removal. This approach would reduce, or perhaps eliminate, the need for expanding aeration tankage by using fixed-film media within the aeration tanks to provide conditions suitable for the development of additional biomass necessary for year-round ammonia and seasonal nitrogen removal. Under this option it would still be necessary to reconfigure the tanks to create "swing" zones that would operate as anoxic zones during the period of the year when nitrogen removal is required and aerobic zones when nitrogen removal is not required. In addition, the construction of one additional secondary clarifier would also be needed.
- A high mixed liquor suspended solids concentration approach that utilizes a membrane bioreactor (MBR) or ballasted settling process, such as the BioMag® process marketed by Evoqua Water Technologies, to provide enhanced biological wastewater treatment for nitrogen removal coupled with chemical addition for phosphorus precipitation. This approach would reduce, or perhaps eliminate, the need to increase aeration tank volume by allowing for operation at high mixed liquor suspended solids concentrations. In addition, the cost of constructing an additional secondary clarifier would be avoided as a result of the use of membrane filtration or ballasted settling. For planning purposes, cost estimates will be developed based on a BioMag® installation.

DRAFT

This document is in draft form. The contents, including any opinions, conclusions or recommendations contained in, or which may be implied from, this draft document must not be relied upon. GHD reserves the right, at any time, without notice, to modify or retract any part or all of the draft document. To the maximum extent permitted by law, GHD disclaims any responsibility or liability arising from or in connection with this draft document.

Each of the secondary/advanced treatment approaches selected for detailed evaluation will include costs for constructing a cloth media effluent filtration system for tertiary phosphorus and suspended solids removal. This system will include provisions for chemical addition for precipitation of soluble phosphorus and flocculation.

Disinfection

- Chlorination
- UV Disinfection

Post Aeration

- Mechanical post-aeration

Support Facilities

- Replace mechanical equipment that is past its useful life in kind.

Residuals Management

- Sludge Thickening
- Sludge Dewatering

Odor Control

- Installation of a biofilter

Pump Stations

- Replace mechanical equipment well past its useful life.

Satellite Wastewater Treatment Systems

Since no concentrated problematic areas for on-site wastewater disposal were identified in the Draft Needs Assessment a satellite wastewater treatment system is not recommended for further evaluation.

DRAFT

This document is in draft form. The contents, including any opinions, conclusions or recommendations contained in, or which may be implied from, this draft document must not be relied upon. GHD reserves the right, at any time, without notice, to modify or retract any part or all of the draft document. To the maximum extent permitted by law, GHD disclaims any responsibility or liability arising from or in connection with this draft document.

6. Treated Water Recharge Technologies and Alternative Sites

6.1 Introduction

All wastewater treatment facilities (centralized, satellite, and cluster) require a means of recharging treated water back to the groundwater system, and the treated water recharge technology needs to be selected to minimize the impacts on nearby surface waters and groundwaters.

The Uxbridge WWTF currently has a surface water discharge to the Blackstone River, as allowed by its NPDES permit. This discharge will continue to be used in the foreseeable future. The following discussion is provided for future satellite facilities. As discussed in chapter 5 the Draft Needs Assessment did not identify any need for a satellite treatment facility. However, in the event of a future need due to remote, concentrated development or another future issue, options for recharge technologies for satellite facilities will be reviewed.

Potential impacts of large treated water recharge flows include groundwater mounding which may cause flooding on adjacent properties and an increase in pollutant concentrations in downgradient, or downstream, water bodies. As a result, the following items should be considered when identifying new treated water recharge technologies and sites:

1. The treated water recharge would preferably be located outside of a contributing area to a public water supply to reduce risks to public health; reduce the perception that “drinking waters would be contaminated by wastewater;” and reduce the cost of additional treatment technologies needed to permit treated water recharge in a water supply area.
2. When recharging to the ground and the groundwater system, treated water recharges must be located where the increased hydraulic loading will not cause flooding at the site or at adjacent properties. This requires sufficient separation between the ground surface and groundwater table so the resultant “groundwater mound” caused by the recharge will not break out above the land surface. Also, the soils at the discharge site must be sufficiently permeable to pass the treated water to the groundwater system without being backed up and flooding the site.
3. When discharging through the existing outfall to the Blackstone River, effluent requirements outlined in the NPDES permit must be met.

This chapter identifies and screens potential treated water recharge technologies, and identifies potential sites for more detailed evaluation in the next phase of the project.

6.2 Identification of Treated Recharge Technologies Used to Recharge to the Groundwater System

6.2.1 Sand Infiltration Beds

Sand infiltration beds are open basins designed to allow treated water to flow across the bottom of the basin and percolate through the sand bed, through the unsaturated zone, and then to the groundwater. Bed maintenance is relatively easy because the bed is exposed at the surface and the sand surface can be raked or replaced if the sand becomes plugged with fine solids. Hydraulic loading rates of 5 gallons per day per square foot (gpd/sf) of bed area are typically allowed by

This document is in draft form. The contents, including any opinions, conclusions or recommendations contained in, or which may be implied from, this draft document must not be relied upon. GHD reserves the right, at any time, without notice, to modify or retract any part or all of the draft document. To the maximum extent permitted by law, GHD disclaims any responsibility or liability arising from or in connection with this draft document.

MassDEP unless hydraulic tests demonstrate a greater infiltration loading capacity at the specific site.

Treated water recharge in sand infiltration beds has the following advantages:

- Bed construction is relatively simple and typically less expensive than other methods.
- Operation and maintenance (O&M) is relatively easy and O&M costs are lowest.
- Hydraulic loading rates are typically higher than other recharge methods, which allow the beds to take up less area.

Treated water recharge in sand infiltration beds has the following disadvantages:

- Construction of new beds requires the clearing of large areas of land, which may have a visual and environmental impact.
- Infiltration beds do not have secondary uses, such as parking lots and recreational areas.
- Disinfection is typically required.

6.2.2 Subsurface Infiltration

Large–scale subsurface infiltration facilities typically utilize pump and piping systems to pressure dose infiltration areas (trenches, beds, or galleys) where the treated water percolates to the groundwater. Maintenance and cleaning of these systems is more difficult because the infiltration area is not exposed to the surface and effluent solids cannot be easily removed. Subsurface infiltration beds can have secondary uses, such as parking lots, lawns, playing fields, and recreational areas. Hydraulic loading rates of 2.5 gpd/sf (of trench or galley base plus side walls) are typically allowed by MassDEP unless hydrogeologic tests demonstrate a greater infiltration capacity at the specific site.

Subsurface infiltration facilities have the following advantages:

- Disinfection is typically not required prior to discharge unless it is in a water supply recharge area.
- Facilities are contained underground and can have a secondary use, such as parking lots and recreational areas.

They have the following disadvantages:

- Large land areas are required (larger than sand infiltration beds) due to lower hydraulic application rates.
- Pressure dosing is typically required for large systems, which adds capital and O&M costs.
- Extensive site work may be required for construction, particularly if the site is forested.
- Limited access for cleaning and maintenance which can result in high maintenance and repair costs.
- Effluent filtration is typically required to reduce the risk of plugging the subsurface beds over time. However, because effluent filtration and disinfection will likely be required by the discharge permit, this is not necessarily a limitation in this application.

DRAFT

This document is in draft form. The contents, including any opinions, conclusions or recommendations contained in, or which may be implied from, this draft document must not be relied upon. GHD reserves the right, at any time, without notice, to modify or retract any part or all of the draft document. To the maximum extent permitted by law, GHD disclaims any responsibility or liability arising from or in connection with this draft document.

6.2.3 Spray Irrigation

Spray irrigation facilities are typically comprised of treated water pumps, distribution piping, and a spraying system consisting of risers and spray nozzles. Treated water is pumped through various distribution lines and discharged via spray nozzles to the surrounding surface area. Spray irrigation systems have often been used at golf courses and in large remote fields. Application rates for non-golf course areas are typically 2 inches per acre per week. Application rates for golf courses are typically based on the turf management needs.

Treated water recharge using spray irrigation has the following advantages:

- Allows for secondary use of land (i.e., golf courses) as regulated by MassDEP.
- Provides irrigation, reducing clean water demands.
- Provides nitrogen uptake by plant life and reduces need for fertilizers at golf courses.
- Evapotranspiration reduces infiltration volume, thereby creating less potential for groundwater mounding.

Treated water recharge using spray irrigation has the following disadvantages:

- Difficult to find locations suitable for or willing to use spray irrigation.
- Limited cold weather use due to potential freezing problems.
- Spray nozzles may be subject to clogging.
- Requires secondary means of treated water recharge or storage during winter months or at times when the sites' secondary use (i.e., golfing) is needed.
- Must meet more stringent MassDEP treatment requirements for reclaimed water use.
- Large areas are needed.

DRAFT

6.2.4 Well Injection

Well injection involves the recharge of treated water to groundwater by pumping the treated water through wells that extend into permeable and saturated geologic strata. When discharged into saturated strata, this type of discharge can be compared to the reverse of extracting water from a well.

Wells can be designed to recharge a range of flows depending on site conditions such as depth to groundwater and geological conditions. A potential concern with well injection is the mounding of groundwater in low elevation areas. As a result, well injection requires testing prior to design and construction. This would include hydraulic conductivity tests, hydrogeologic surveys, and pilot testing.

Well injection for treated water recharge has been implemented on a limited basis throughout the United States, and there is limited information on the proper siting, design, construction, and operation of the wells. Discussions with MassDEP indicate minimal support for the development of this technology because it often utilizes chlorination, which can create secondary impacts to the groundwater such as the formation of disinfection byproducts that can pose potential health risks.

Treated water recharge with well injection has the following advantages:

- The land area required would be much less than the area required for infiltration beds, subsurface infiltration, and spray irrigation.

This document is in draft form. The contents, including any opinions, conclusions or recommendations contained in, or which may be implied from, this draft document must not be relied upon. GHD reserves the right, at any time, without notice, to modify or retract any part or all of the draft document. To the maximum extent permitted by law, GHD disclaims any responsibility or liability arising from or in connection with this draft document.

- The treated water recharge would be occurring below the surface, causing minimal surface disruption.
- Recharge points (wells) could be spread over a large area to minimize groundwater mounding.

It has the following disadvantages:

- Total organic carbon (TOC) removal is needed to minimize plugging in the wells and to meet MassDEP regulations.
- Relatively unproven technology in Massachusetts.
- Energy costs for pumping are higher.
- Limited performance data is available.
- Extensive pilot testing would typically be required.

6.2.5 Wick Well Technology

Wick technology is a relatively new approach to treated water recharge. Wick technology entails the use of larger (3- to 6-foot diameter) wells dug into the aquifer. The wells are filled with stone; treated water is recharged over (or adjacent to) the stone to infiltrate via gravity flow into the underlying aquifer.

Treated water recharge with wick wells has similar advantages and disadvantages to injection wells. Advantages include:

- The land area required would be much less than the area required for infiltration beds, subsurface infiltration, and spray irrigation.
- The discharge would occur below the surface, causing minimal surface disruption.
- Discharge points (wells) could be spread over a large area to minimize groundwater mounding.

Disadvantages include:

- TOC removal is needed to minimize plugging in the wells and to meet MassDEP regulations.
- Relatively unproven technology in Massachusetts. Limited performance data is available.

A variation of this technology can be used to increase the capacity of sand infiltration beds. If the beds are limited with their infiltration capacity, wick wells can be installed in the beds to convey the water through the soil layers that have lower transmissivity. The upper layers of the bed will still be used for infiltration and initial filtering, and the filtered water will find the wick wells that will act as a drain to the basin.

6.2.6 Drip Irrigation

Drip irrigation is a subsurface version of spray irrigation. Subsurface piping is laid out approximately 6 to 12 inches below the surface in areas to be irrigated. Recharge of treated water occurs through emitters that are spaced 12 to 24 inches apart; the laterals are spaced at 12- to 24-inch intervals. Water is pumped through the lines under pressure and is discharged slowly through the emitters. The intent of the system is to recharge the water into the root zones of the plants where an irrigation and nutrient-uptake benefit can occur.

DRAFT

This document is in draft form. The contents, including any opinions, conclusions or recommendations contained in, or which may be implied from, this draft document must not be relied upon. GHD reserves the right, at any time, without notice, to modify or retract any part or all of the draft document. To the maximum extent permitted by law, GHD disclaims any responsibility or liability arising from or in connection with this draft document.

Advantages include:

- Can be used in rolling terrain conditions.
- Is associated with water reuse because water can be recharged into the root zone of plants or crops.
- Ease of construction if the application is in a large vegetated area with fine-grained soils (few rocks).
- Low delivery rate to minimize water table elevation impacts.

Disadvantages include:

- Difficult to monitor emitter performance.
- Periodic backflushing is required.
- May not operate or be practical in very cold conditions.
- Facilities must be protected from damage from heavy vehicles.

6.2.7 Surface Water Discharge

This alternative involves the siting, construction, and operation of a new surface water discharge for effluent disposal into the Blackstone River or one of its tributaries in Uxbridge. This technology would likely have the least impact on drinking water supplies.

Treated surface water discharge has the following advantages:

- The land area required would be much less than the area required for infiltration beds, subsurface infiltration, and spray irrigation.
- Proven technology.

It has the following disadvantages:

- Extensive design and permitting requirements depending on the location of the discharge.
- Possible high public opposition.
- Potential reduction in aquifer recharge.
- Reserve area may be required.
- Effluent disinfection is required.
- Depending on site location could require a long force main to reach a discharge point.

6.3 Screening of Treated Water Recharge Technologies

The screening of treated water recharge technologies is based on a general description of each technology, the respective advantages and disadvantages, and the screening criteria established in this report. The following text provides a brief discussion of the screening process.

Sand infiltration beds are a simple and reliable effluent discharge technology with relatively low operating costs.

Subsurface infiltration facilities are well understood and reliable. These facilities are constructed below ground and therefore have minimal visual impacts, reduced potential for odors, and can provide for secondary use of the land. However, treated water recharge in subsurface infiltration

DRAFT

This document is in draft form. The contents, including any opinions, conclusions or recommendations contained in, or which may be implied from, this draft document must not be relied upon. GHD reserves the right, at any time, without notice, to modify or retract any part or all of the draft document. To the maximum extent permitted by law, GHD disclaims any responsibility or liability arising from or in connection with this draft document.

facilities has higher land area requirements and the facilities are not easily cleaned. Therefore, the life of the facilities will be dependent on the quality of the effluent.

Spray irrigation and drip irrigation are simple and reliable treated water recharge technologies. In addition, they can provide nitrogen uptake and removal.

Treated water recharge through well injection has relatively low land requirements and construction costs. Well injection has the potential of plugging at the injection point due to build-up of fine solids and biofouling. MassDEP resistance to support and permit this technology reduces its feasibility. For this reason it is not recommended for further evaluation.

Treated water recharge through wick wells is a variation of well injection and has similar advantages and disadvantages. Both operational experience and regulatory acceptance of this technology are being gained in Massachusetts, and more complete acceptance is contingent on long-term demonstration of effectiveness. This technology is not recommended for further evaluation.

Treated surface water discharges have minimal land requirements and groundwater impacts.

The Uxbridge WWTF currently discharges through a surface water discharge to the Blackstone River, as allowed by NPDES Permit No. MA0102440. It is recommended that the Town continue to use this discharge for the Uxbridge WWTF.

The Draft Needs Assessment Report showed no concentrated, problematic areas for on-site wastewater disposal. However, since general indicators do exist in the Town, it is possible that during future property development, regions unsuitable for individual on-site disposal system may be found. If a new wastewater treatment facility (either centralized, cluster, or satellite) is being considered, the following treated water recharge technologies are recommended for further evaluation:

1. Sand infiltration beds
2. Subsurface leaching
3. Spray irrigation and drip irrigation
4. Treated surface water discharge

DRAFT

This document is in draft form. The contents, including any opinions, conclusions or recommendations contained in, or which may be implied from, this draft document must not be relied upon. GHD reserves the right, at any time, without notice, to modify or retract any part or all of the draft document. To the maximum extent permitted by law, GHD disclaims any responsibility or liability arising from or in connection with this draft document.

7. Collection System Technologies

7.1 Introduction

The purpose of this chapter is to identify and screen collection system alternatives that could be used to extend sewer service. Although no environmental need was identified in the Needs Assessment, sewers may be extended to accommodate population growth in the future. A detailed description of the existing collection system can be found in Chapter 5 of the Draft Needs Assessment Report.

7.2 Collection System Alternatives

The layout and design of a collection system depends on several factors. The key factors include the type of collection system technology, the topography of the service area, utilities located in the road right-of-way (ROW), groundwater elevations, and the location of the treatment and treated water recharge site(s). Some of these factors will be decided at the end of this study, while many of the site-specific factors would be decided when a system is designed.

The installation of a wastewater collection system in the road ROW is disruptive to traffic activity. The use of trenchless technology to install a collection system must be considered during the planning and design processes to minimize disruptions. Trenchless technology is technology that allows installation of wastewater collection and transmission mains without digging a trench in the road ROW.

At the beginning of the planning process for a potential collection system, the system coverage must be estimated to calculate system length and system costs. Each type of collection system technology offers some flexibility on how (or where) individual sewers are installed, but the overall system coverage for the various technologies will generally be the same.

Several types of sanitary sewer collection systems are in use throughout the United States, each with advantages and disadvantages. Careful analysis must be performed during design in the area being sewered to determine the feasibility of a particular collection system. The purpose of this chapter is to identify and screen collection system alternatives which could be used to provide sanitary sewer service to the planning area(s) identified in the Draft Needs Assessment Report. This chapter presents several different types of collection systems and the associated advantages and disadvantages of each.

7.2.1 Gravity Sewers and Lift Stations

The most prevalent type of collection system is a traditional gravity sewer. This type of system involves the installation of sewers at a constant downhill gradient. The slope is designed to maintain a sufficient velocity within the sewer line to ensure that all solids stay suspended within the waste stream. The minimum size of a typical sanitary sewer is 8 inches. The pipe size increases proportionally with the expected wastewater flow.

The sewer is installed at a constant slope until its depth becomes so great that a sewage pumping station (lift station) is needed to “lift” the flow to a wastewater treatment plant or to another gravity sewer. In flat terrain, several lift stations may be required before the flow is pumped to a treatment facility.

In most situations, homes along a gravity sewer connect into the system with gravity service connections from the building to the collector sewer. Houses that are below the street elevation use

DRAFT

This document is in draft form. The contents, including any opinions, conclusions or recommendations contained in, or which may be implied from, this draft document must not be relied upon. GHD reserves the right, at any time, without notice, to modify or retract any part or all of the draft document. To the maximum extent permitted by law, GHD disclaims any responsibility or liability arising from or in connection with this draft document.

small pumps and a small diameter force main (1½ to 2 inches) for discharging to the collector sewer.

The installation cost and ease of construction of a gravity sewer depends greatly upon the topography within a particular area and on the specific soil types. In areas where topography is consistently increasing or decreasing, the sewers can be installed close to minimum depth. In very hilly areas, deep sewers and/or lift stations may be required. This can significantly increase construction costs when compared with other options.

Advantages of gravity sewers include the following:

- A properly designed and installed gravity sewer requires little maintenance.
- A gravity system can be easily expanded to serve additional areas.
- The potential for odors in a properly designed gravity sewer is low.
- A gravity system is reliable, since it is not dependent upon electrical power for operation. When lift stations are used on collector sewers, electrical generators are provided to supply power during a power outage.

Disadvantages of gravity sewers include:

- Gravity sewers are installed at a constant slope, and thus can require deep excavations as the topography changes. They also have practical limitations in depth.
- If not installed properly, gravity sewers are prone to infiltration from groundwater, which reduces the wastewater carrying capacity of the pipe, increases pumping costs, and can affect treatment capacity and process effectiveness at the downstream treatment facility.
- May be limited by availability of appropriate lift station locations.

DRAFT

7.2.2 Low Pressure Sewers with Grinder Pumps

This type of collection system requires the installation of grinder pumps to serve each building or group of buildings. Wastewater flows by gravity into a pump chamber, where the sewage is shredded and pumped into a low pressure sewer, eventually discharging to a gravity main or directly to a treatment facility. This type of technology has become more widely used over the past 10 years, and is particularly suited to areas where there is a need to minimize excavation.

The typical pressure in this type of system is 5 to 40 pounds per square inch (psi). Pressure systems can be expanded to serve additional areas up to a design limit of 60 psi. Typically, systems can be expanded to serve a large number of additional homes, but the overall expansion capability tends to be less than that of a gravity sewer.

When connecting the pressure sewer lines into a gravity line or directly to a lift station, odor control systems may be required at the discharge point to mitigate odors created in the pressure sewer pipe. Also, manholes at the discharge point should be protected from corrosion resulting from high hydrogen sulfide concentrations.

Advantages of a pressure sewer include the following:

- The collection main is installed at a relatively shallow depth and is independent of grade changes. This allows shallower excavation, lower piping construction costs, and less overall disruption to the area due to a shorter installation construction period.
- A pressure sewer can serve areas of hilly terrain or marginal slope.

This document is in draft form. The contents, including any opinions, conclusions or recommendations contained in, or which may be implied from, this draft document must not be relied upon. GHD reserves the right, at any time, without notice, to modify or retract any part or all of the draft document. To the maximum extent permitted by law, GHD disclaims any responsibility or liability arising from or in connection with this draft document.

- The pressure sewer in the street is not subject to infiltration as a gravity sewer would be.
- The shredding action of the pump eliminates the need for a larger-size collection system. Pressure sewers tend to be much smaller diameter than a typical sanitary sewer, ranging from 1½ to 4 inches, depending upon the expected design flow.

Disadvantages to this type of system include the following:

- Each building or group of buildings in the system would have to be equipped with a pump unit, which increases operation and maintenance requirements. Spare parts must be maintained for these units to minimize disruption of service.
- Each pump unit is dependent upon electrical power for proper operation; since the pumps are located at individual homes, municipal backup electrical power is typically only provided with mobile generators. Storage capacity is typically built into each pump chamber (normally 60 gallons). However, in a prolonged power outage, it would be possible for the wastewater flow to exceed this capacity and back up into the pipelines within the structures. This can be remediated by providing electrical connections on each pump unit to allow a service crew to connect a portable generator (the mobile generators identified previously) and pump out each unit during times of prolonged power outage.
- This system is more sensitive to seasonal flow conditions than a gravity sewer. In areas with extreme seasonal fluctuations, minimum flow conditions must be carefully quantified to be sure the sewage flow can properly travel through the system. If inadequate flow exists, solids can harden within the sewer and cause blockages.

7.2.3 Septic Tank Effluent Sewers

Septic tank effluent sewers use either new or existing water-tight septic tanks and are designed to transport septic tank effluent to a treatment facility. The use of septic tanks prevents a large portion of solids and grease from entering the sewer.

Septic tank effluent sewer systems require septic tank maintenance, including routine pumping and treatment of septage. Each septic tank should be inspected during sewer construction to replace those tanks that provide inadequate service. Inadequate tanks include those that are prone to infiltration, are insufficient in size, have inappropriate inlets or outlets, or do not meet current Title 5 requirements.

When connecting septic tank effluent into existing gravity systems, odor control systems may be required at the discharge point and downstream pump stations to mitigate odors caused by the hydrogen sulfide content in the effluent. Manholes at the discharge point should be protected from corrosion, which can occur as a result of the high hydrogen sulfide concentrations.

There are two types of septic tank effluent collection systems: (a) septic tank effluent pump systems; and (b) septic tank effluent gravity systems. A discussion of each system is presented in the following sections.

Septic Tank Effluent Pump (STEP) System

The STEP system involves the installation of an effluent pump immediately downstream of the septic tank (or in the septic tank), which pumps the effluent to a pressure sewer. Thus, the system is very similar to a pressure system.

The STEP system has the following advantages:

DRAFT

This document is in draft form. The contents, including any opinions, conclusions or recommendations contained in, or which may be implied from, this draft document must not be relied upon. GHD reserves the right, at any time, without notice, to modify or retract any part or all of the draft document. To the maximum extent permitted by law, GHD disclaims any responsibility or liability arising from or in connection with this draft document.

- The system can serve in areas of hilly or flat terrain.
- The piping can be installed at shallow depths, reducing construction costs and overall disruption associated with excavation.
- The pressure sewer in the street is not subject to infiltration, as a gravity sewer could be.
- Septic tank effluent pumps tend to be less expensive than grinder pumps because the need for a shredder is eliminated.
- Few solids are transported in the system, which reduces the potential for sewer blockages caused by solids deposition.

The STEP system has the following disadvantages:

- The septage must be periodically pumped from the individual septic tanks and transported to a WWTF for treatment.
- The system relies on electrical power to operate the pumps and will not function during power outages.
- A large number of pumps are required, which creates greater maintenance requirements of this system when compared to a gravity sewer.
- Hydrogen sulfide buildup is common within these pipelines, increasing the potential for odors and corrosion.
- A treatment plant that receives flow from this type of system must be carefully designed because it will not receive the higher organic loading that is needed for biological nitrogen removal treatment processes.

DRAFT

Septic Tank Effluent Gravity (STEG) System

The STEG system can be used to transport effluent from septic tanks to a pumping station or treatment facility. Layout of the system is very similar to a gravity system.

Advantages of STEG sewers include the following:

- A flatter slope can be maintained in comparison with gravity sewers, because most of the larger solids have been removed in the septic tank. The flatter slope will allow the piping to be installed at shallower depths.
- The lack of solids allows smaller diameter pipes to be installed. Sizes typically range from 4 to 6 inches versus 8 inches or greater for a typical gravity sewer.
- Cleanouts can be installed instead of manholes, reducing installation costs.
- Very little maintenance is required on this type of system when compared to a pressure or vacuum system unless lift stations are used.

The STEG system has the following disadvantages:

- The septage must be periodically pumped from the individual septic tanks and transported to a WWTF for treatment.
- Hydrogen sulfide buildup is common within these pipelines, which increases the potential for odors and corrosion.
- They are not adaptable to hilly terrain.

This document is in draft form. The contents, including any opinions, conclusions or recommendations contained in, or which may be implied from, this draft document must not be relied upon. GHD reserves the right, at any time, without notice, to modify or retract any part or all of the draft document. To the maximum extent permitted by law, GHD disclaims any responsibility or liability arising from or in connection with this draft document.

- A treatment plant that receives flow from this type of system must be carefully designed because it will not receive the higher organic loading that is needed for biological nitrogen removal treatment processes.

7.2.4 Vacuum Sewers

Vacuum sewers are typically smaller in diameter than traditional gravity sewers and rely upon a vacuum created within the pipeline to draw the sewage towards a lift station. A vacuum pump located at the lift station pumps air out of the sewer, creating a vacuum inside the sewer. Sewage from individual homes flows by gravity to a vacuum valve pit. As sewage fills a chamber in the bottom of the valve pit, a sensor activates an automatic vacuum valve. When the valve opens, sewage is drawn into the sewer because of the pressure difference between the sewer and atmospheric pressure outside the valve. Each subsequent opening of the valve draws the sewage further downstream until it reaches the lift station, where it is pumped to a gravity sewer or treatment facility.

Advantages of vacuum sewers include:

- Vacuum sewers can be installed at shallow depths, which can reduce installation costs and excavation time.
- The infiltration potential tends to be low. Infiltration can occur if a pipe leaks or breaks in areas where the line is completely submerged in groundwater.
- Vacuum stations can be equipped with emergency generators, which allow the system to remain in operation during power outages.

A vacuum system has the following disadvantages:

- A vacuum must be constantly maintained in the pipeline for the system to work. Malfunctions in the line can affect the entire system and must be fixed quickly to keep the system operational. Leaks or malfunctions may also be difficult to locate.
- There is potential for odor generation at the lift station due to the vacuum pump air flow. This air flow must be treated to minimize odors.
- This type of system is not readily adaptable to hilly terrain.
- To design a properly operating system, the design flows must be estimated as accurately as possible, and a detailed route survey must be performed. Vacuum systems are sized for specific cases and cannot be easily expanded to serve additional homes.
- Careful design of pipe materials is needed to avoid vacuum pipe breakage problems.
- Careful design of valve pit venting is needed to avoid valve freezing problems that have occurred in northern climates.

7.2.5 Combination of Technologies

In many cases, the combination of terrain, soil conditions, and congestion of an area prevents one single type of sewer system from being cost-effective. In these situations, the combination of two or more methods may achieve an optimum solution. The combination most widely used is pressure sewers discharging to gravity sewers.

In some cases, it is not feasible to combine methods due to the inherent characteristics of the specific technology. Septic tank effluent systems are designed to transport only liquids using a small

DRAFT

This document is in draft form. The contents, including any opinions, conclusions or recommendations contained in, or which may be implied from, this draft document must not be relied upon. GHD reserves the right, at any time, without notice, to modify or retract any part or all of the draft document. To the maximum extent permitted by law, GHD disclaims any responsibility or liability arising from or in connection with this draft document.

diameter pipe. Thus, any other type of system which carries solids should not be able to connect into this system. Also, septic tank effluent systems are designed to lessen the organic loading to a treatment plant, and this advantage would be minimized if a septic tank effluent system discharged into a sewer carrying all the solids.

When considering a combination of technologies during design, a careful review should be made of the local conditions, and cost estimates should be prepared which include construction as well as operating and maintenance costs.

7.2.6 Screening of Collection System Technologies

The screening of collection system technologies is based on the description provided for each technology, the respective advantages and disadvantages, and the screening criteria established earlier in this report. A summary of collection system technologies and a side-by-side comparison of screening criteria are included in Table 7-1.

Wastewater collection with gravity sewers and lift stations is a widely used, simple, and reliable technology. The majority of the existing collection system in the Town of Uxbridge is comprised of gravity sewers. Gravity sewers can easily be expanded to accommodate additional flows. The relative cost of gravity sewers depends on environmental conditions and increases with the number of lift stations required and depth of excavations.

Pressure sewers are less widely used than gravity sewers, but have relatively low construction costs and are adaptable to changes in topography. Public acceptance of pressure sewers may be low due to the need for a pump at each individual home or business. In addition, pressure sewers rely on electrical power, and flow backup can occur during power outages if mobile generators are not utilized.

The main advantage of septic tank effluent systems (both STEP and STEG) is the reduced amount of solids transported in the collection system and the reduced potential for sewer blockage caused by solids deposition. Unfortunately, the lack of organic solids in the sewage delivered to the treatment plant will make the nitrogen removal process more difficult. These systems also require periodic pumping of the individual septic systems, which adds a high operational cost and potential for odor generation. They also do not lend themselves to being added to existing collection systems that transport all the solids.

Vacuum sewers have maintenance requirements similar to low pressure systems and require significant staff training for implementation and operation. Vacuum sewers are not easily expandable and require accurate flow estimates prior to construction. The capital costs of vacuum sewers are comparable to gravity systems.

The following collection system technologies are identified for possible future use in Uxbridge:

1. Gravity sewers and lift stations.
2. Pressure sewers with grinder pumps.

As discussed previously, these technologies are typically selected during preliminary design or detailed design of the system based on site-specific considerations of topography, depth to groundwater, potential traffic impacts, and flow variations in the neighborhoods being served.

DRAFT

This document is in draft form. The contents, including any opinions, conclusions or recommendations contained in, or which may be implied from, this draft document must not be relied upon. GHD reserves the right, at any time, without notice, to modify or retract any part or all of the draft document. To the maximum extent permitted by law, GHD disclaims any responsibility or liability arising from or in connection with this draft document.

8. Flow and Loading Reduction Alternatives

8.1 Introduction

The identification of flow and loading reduction alternatives for water and sewer services is important in order to minimize the expense of new (or modified) facility construction. These alternatives can also conserve water and minimize impact to natural resources. Reduction of wastewater flows and loadings to on-site septic systems can also reduce the impact of pollutant discharges to groundwater and surface waters downgradient of recharge areas.

The purpose of this chapter is to review methods that could be utilized to reduce the wastewater volume and pollutant loadings generated by residential and non-residential sources.

8.2 Infiltration and Inflow (I/I) Reduction

8.2.1 Summary of I/I Evaluations

The 2006 I/I analysis conducted by Beta Group Inc. is described in detail in the Draft Needs Assessment Report. Though excessive infiltration rates were not found in the system the following recommendations were made at the conclusion of the report:

- Inflow investigation of two subareas to identify potential sources of inflow into the system.
- Repair select pipe defects identified in the report.
- Repair all manhole defects identified in the report.
- Conduct a Town-wide manhole inspection and repair program

It is recommended that the sub-areas identified in the 2006 report be investigated further. Though the estimated current I/I flows are comparable to those estimated in the I/I analysis, it should be noted that the analysis is approximately 10 years old and the system may have deteriorated further during the time that has elapsed since the study.

Regular cleaning, inspection, and maintenance on the collection system will help reduce I/I and maintain a high treatment capacity at the facility.

8.3 Reduction of Household Water Consumption

8.3.1 Plumbing Codes and Water Reduction Devices

Water use and wastewater flows from households may be reduced through the utilization of household water-saving devices. Some of the devices available are water saver toilets, reduced flush toilets, vacuum flush toilet systems, washwater recycling systems for toilet flushing, faucet aerators, flow limiting valves, and pressure reducing valves.

Approximately 70% of the total volume of wastewater generated within the average home is derived from the toilet, laundry, and bath. The most substantial water-saving and wastewater reductions can be made in these areas. Water saving toilets, reduced flush devices, and restricted flow showerheads are common water-saving devices.

DRAFT

This document is in draft form. The contents, including any opinions, conclusions or recommendations contained in, or which may be implied from, this draft document must not be relied upon. GHD reserves the right, at any time, without notice, to modify or retract any part or all of the draft document. To the maximum extent permitted by law, GHD disclaims any responsibility or liability arising from or in connection with this draft document.

Water-saving devices are more expensive than standard fixtures and would probably not be installed by homeowners without external incentive. However, the use of such devices by individual customers should be encouraged in new construction or as replacements for improperly functioning devices. State building codes now require the installation of low-flow devices during new construction.

8.4 Pricing Policy for Water and Wastewater Service

Pricing policies for water and wastewater service are currently structured to discourage water consumption (wastewater generation). The Town plans to continue this current water pricing rate, which tends to encourage water conservation and therefore discourage water consumption.

The 2012 Massachusetts Water Conservation Standards recommend that water users be billed at least quarterly (if not more frequently) so that customers are better able to keep track of their water usage and seasonal variations in order to make adjustments to their water use accordingly. The Town of Uxbridge should continue its current practice of billing on a quarterly cycle.

8.5 Wastewater Reuse and Recycling

Lawns could potentially be watered with reclaimed wastewater to conserve the use of clean water and minimize the amount of treated water that needs to be recharged. Currently, reclaimed water use is regulated by MassDEP and the reuse of treated wastewater is allowed for irrigation, recreational use, industrial or commercial cooling or air conditioning, toilet flushing, agricultural use, creation of wetlands, commercial laundries, carwashes, industrial boiler feed, silviculture, snowmaking, fire protection, dust control, soil compaction, street cleaning, and aquifer recharge.

Golf courses and Town-owned properties can be irrigated with treated effluent if the effluent is adequately treated and proper precautions are taken to avoid human contact with the irrigation water, as regulated by 314 CMR 20 Reclaimed Water Permit Program and Standards. This approach conserves clean water that would have been used for this same use. However, it does not eliminate the need for other treated water recharge facilities, because redundant facilities are required when golf courses and public lands are being used by the public and during time periods when irrigation cannot be used.

Treated wastewater is often also used as process water for local industries. This scenario is not promising in Uxbridge, since there are no large industries that utilize large volumes of process water.

8.6 Reduction of Wastewater Loadings

The opportunities for reducing wastewater pollutant loadings are limited to the non-sanitary components of wastewater. The loadings associated with food wastes are added into wastewater when garbage grinders are installed in kitchen sinks. The wastewater loading associated with food can be significant. This load could be reduced by disposing of food waste as a solid waste or using a household composting unit. The use of garbage grinders in homes with septic systems contributes additional nitrogen to the groundwater and increases the solids loading to the septic tank, requiring more frequent pumping.

Commercial and industrial businesses may also have opportunities to reduce wastewater loadings to the Uxbridge WWTF (or their own septic systems) by reprocessing of non-sanitary waste byproducts from their operations. Individual businesses need to determine if any wastes could be recycled, reused, or disposed of as a solid waste instead of adding them to the wastewater flow.

DRAFT

This document is in draft form. The contents, including any opinions, conclusions or recommendations contained in, or which may be implied from, this draft document must not be relied upon. GHD reserves the right, at any time, without notice, to modify or retract any part or all of the draft document. To the maximum extent permitted by law, GHD disclaims any responsibility or liability arising from or in connection with this draft document.

8.7 Waterless Toilets

Waterless toilets (composting and incinerating toilets) were discussed in Chapter 4. These toilets provide flow and loading reductions because they do not utilize water and they convert sanitary wastes to solid waste or to a usable soil conditioner. As discussed in Chapter 4, these toilets are not considered a feasible solution for watershed-wide application because there is usually poor public acceptance of handling composted or incinerated human waste. A public health threat could occur if the systems were implemented on a large scale without proper operation, management, and waste disposal. These systems may be suitable for isolated areas and informed individuals who are willing to take on the significant responsibility of the systems.

8.8 Growth Management Regulation

Following sewer installations in any of the planning areas, increased growth could conceivably occur as a direct result of the removal of the current growth limitation that on-site systems may have provided. Currently, Title 5 regulations control the number of bedrooms allowed per acre. If these areas are sewered, the Title 5 regulations may no longer apply. To counteract this potential increased growth, zoning modifications could be instituted to regulate development. These zoning modifications could include increasing the allowable minimum lot sizes and establishing restrictions on building sizes and uses.

The State Revolving Fund (SRF) regulations (310 CMR 44) encourage towns to adopt landuse controls to limit wastewater flows from sewered areas. These landuse controls are often called "Growth Neutral" or "Flow Neutral" requirements. The landuse controls are subject to review and approval of MassDEP in consultation with the Department of Economic Development (MassDED) as a prerequisite for a 0% low interest loan from the SRF. If the landuse controls do not meet MassDEP or MassDED requirements, the Town is eligible for a higher interest rate (typically 2%) depending on the other funding rules at the time of the SRF application.

These regulations are a result of the "Environmental Bond Bill" Chapter 313 of the Acts of 2008 (also known as the O'Leary Bill) to allow towns to receive 0% low interest loans for wastewater infrastructure projects that meet specific requirements such as the Flow Neutral requirement identified above. The four other primary requirements are:

1. The project must be primarily intended to remediate or prevent nutrient enrichment of a surface water body or a source of water supply
2. The applicant is not currently subject, due to a violation of a nutrient related total maximum daily load standard or other nutrient based standard, to a MassDEP enforcement order, administrative consent order or unilateral administrative order, enforcement action by the United States Environmental Protection Agency, or subject to a state or federal court order relative to the proposed project.
3. The applicant has a CWMP approved pursuant to regulations adopted by MassDEP.
4. The project has been deemed consistent with the regional water resources management plans if one exists.

Applicants need to demonstrate that they meet the five requirements through an application process. The Town has been evaluating this issue and is interested in adopting a sewer use regulation to limit future growth in the planning area. This work is ongoing.

DRAFT

This document is in draft form. The contents, including any opinions, conclusions or recommendations contained in, or which may be implied from, this draft document must not be relied upon. GHD reserves the right, at any time, without notice, to modify or retract any part or all of the draft document. To the maximum extent permitted by law, GHD disclaims any responsibility or liability arising from or in connection with this draft document.

8.9 Summary

The Town of Uxbridge has policies in place that encourage the conservation of water. Opportunities to reduce wastewater loadings are mainly the reduction of food wastes or other non-sanitary wastes. Regular sewer inspections and repairs will help minimize I/I in the system. It is recommended that the Town continues with its policies encouraging water conservation and proceeds with Growth Neutral Controls.

DRAFT

This document is in draft form. The contents, including any opinions, conclusions or recommendations contained in, or which may be implied from, this draft document must not be relied upon. GHD reserves the right, at any time, without notice, to modify or retract any part or all of the draft document. To the maximum extent permitted by law, GHD disclaims any responsibility or liability arising from or in connection with this draft document.

9. Alternative Plan Identification and Future Evaluations

9.1 Introduction

The first phase in developing a CWMP for the Town of Uxbridge involved assessing the Town's wastewater treatment capacity needs for the next 20 years. Findings, conclusions, and recommendations resulting from the assessment of wastewater treatment capacity needs were presented in the previously submitted Draft Needs Assessment Report. Major conclusions outlined in that Report are summarized as follows:

- Analysis of areas of the Town where sanitary sewer service is currently not provided did not identify any concentrated areas where on-site wastewater disposal appears problematic. The lack of specific indicators such as septic system failures or areas of impaired groundwater quality suggest that these areas appear to be suitable for continued long-term use of on-site wastewater disposal systems.
- Although analysis of wastewater flow projections indicates that the Uxbridge WWTF has sufficient hydraulic capacity to support population growth projections for the Town over the next 20 years, new effluent limits added to the facility's discharge permit by MassDEP will require upgrading the degree of treatment provided for removal of nutrients (nitrogen and phosphorus).
- In addition, now that the Uxbridge WWTF has been in service for more than 30 years, many of the mechanical and electrical equipment, instrumentation, and control systems are either approaching, or have already reached, the end of their useful life. Since buildings and structures still have significant value, replacement of the components that have reached the end of their useful life is recommended for continued long-term reliable and cost-efficient service.

This Alternatives Screening Analysis Report documents the second phase in developing a CWMP for the Town. Alternatives selected for further detailed evaluation will be evaluated in further detail in the next phase of CWMP development. The next phase will include analysis of estimated life-cycle costs for each alternative. Life-cycle costs will include estimates of initial costs for capital improvements as well as annual costs for long-term operation and maintenance. In addition, the further detailed analysis of alternatives will also consider non-monetary factors.

The purpose of this chapter is to summarize the alternative plans selected for detailed evaluation. In addition, the "no action" alternative is discussed for the purpose of identifying the monetary and non-monetary costs of doing nothing to address the Town's projected wastewater treatment capacity needs.

9.2 Discussion of the No Action Alternative

9.2.1 Areas of the Town Serviced by Centralized Treatment

The No Action alternative for centralized treatment involves continued long-term operation of the Uxbridge WWTF with no improvements to either upgrade the degree of wastewater treatment provided or to replace mechanical and electrical equipment, instrumentation, and control systems that have reached the end of their useful life.

DRAFT

This document is in draft form. The contents, including any opinions, conclusions or recommendations contained in, or which may be implied from, this draft document must not be relied upon. GHD reserves the right, at any time, without notice, to modify or retract any part or all of the draft document. To the maximum extent permitted by law, GHD disclaims any responsibility or liability arising from or in connection with this draft document.

If no action is taken, the cost of operating and maintaining existing mechanical and electrical equipment, instrumentation, and controls will continue to become more difficult as equipment becomes obsolete and replacement parts become more difficult and costly to obtain. The frequency of equipment failures can be expected to increase, which will increase operating costs and make continued compliance with discharge permit effluent limits more and more difficult to achieve.

In addition, because the Uxbridge WWTF was not designed to provide the degree of wastewater treatment necessary for consistent and reliable compliance with the new effluent limit for total nitrogen and the more stringent effluent limit for total phosphorus, permit non-compliance can be expected. Permit non-compliance may cause or contribute to degradation of water quality conditions in the Blackstone River, which would likely expose the Town to potential legal enforcement actions by MassDEP, USEPA, and environmental groups.

For these reasons, selection of the No Action alternative for properties serviced by centralized treatment is not recommended.

9.2.2 Areas of the Town Which Utilize On-Site Wastewater Disposal

Under the No Action Alternative portions of the Town not serviced by centralized treatment would continue to utilize on-site wastewater disposal. Since the Draft Needs Assessment did not identify any concentrated areas of the Town that are problematic for on-site wastewater disposal the continued use of on-site wastewater disposal is a feasible and cost effective option.

9.3 Alternatives Evaluated For Potential Future Needs

While the Needs Assessment Report found no site specific data indicating concentrated, problematic areas for on-site wastewater disposal the following technologies were evaluated in the event of a future need due to remote concentrated development or another future issue:

- Individual on-site and cluster systems
- Treated water recharge
- Collection systems
- Satellite treatment systems

None of the technologies are recommended for further evaluation at this time. However if, in the future, a need is identified for these technologies, the following alternatives should be considered for further evaluation:

Individual On-Site System and Cluster System Alternatives

- Conventional Title 5 septic systems
- I/A systems for size constrained sites

Treated Water Recharge Technologies

- Sand infiltration beds
- Subsurface leaching
- Spray irrigation
- Drip irrigation

DRAFT

This document is in draft form. The contents, including any opinions, conclusions or recommendations contained in, or which may be implied from, this draft document must not be relied upon. GHD reserves the right, at any time, without notice, to modify or retract any part or all of the draft document. To the maximum extent permitted by law, GHD disclaims any responsibility or liability arising from or in connection with this draft document.

Collection System Technologies

- Gravity sewers and lift stations
- Pressure sewers with grinder pumps
- Vacuum sewers

Collection System Technologies

- Suspended Growth Biological Treatment
- Attached Growth (Fixed Film) Biological Treatment
- Plant Based Wastewater Treatment Systems

9.4 Alternatives Recommended for Further Evaluation

The following section outlines alternatives recommended for further evaluation for the centralized treatment system. Alternatives are divided into the following two categories:

- Processes for which the "fix it first" alternative is recommended
- Processes for which evaluation of a new process is recommended – either because the existing process no longer meets current design standards or does not provide the degree of treatment required by the new NPDES permit.

"Fix It First" Alternative

The "Fix it First" alternative looks at reusing as much of the Town's existing infrastructure as feasible by repairing and/or upgrading existing equipment. This alternative is recommended for the following processes:

- Main Pump Station
- Primary clarifiers
- Grit chamber
- Chlorine contact tanks
- Secondary clarifiers (3 existing)
- Support facilities

Each of these processes are adequate to meet the requirements of the new permit (though additional tankage is required for some of these processes) but each process has mechanical parts well past their useful life that need to be replaced. For these processes the most cost-effective option is to replace mechanical equipment in kind and reuse as much of the existing tankage as possible.

Pump Station Alternatives

The following pump station alternatives are recommended for further evaluation:

- Replacement of the West River Pump Station

Preliminary Treatment Alternatives

The following preliminary treatment alternatives are recommended for further evaluation:

DRAFT

This document is in draft form. The contents, including any opinions, conclusions or recommendations contained in, or which may be implied from, this draft document must not be relied upon. GHD reserves the right, at any time, without notice, to modify or retract any part or all of the draft document. To the maximum extent permitted by law, GHD disclaims any responsibility or liability arising from or in connection with this draft document.

- Replacement of grinder and coarse bar screen with two fine screens and replacement of all mechanical equipment which is past its useful life.

Secondary/Advanced Treatment Alternatives

The following secondary/advanced treatment alternatives are recommended for further evaluation:

1. **MLE.** This alternative involves upgrading the Uxbridge WWTF to provide additional treatment for consistent and long-term compliance with the new effluent limits for total nitrogen and total phosphorus. The upgrade will include expanding the volume of aeration tanks necessary for achieving seasonal nitrogen removal using a Modified Ludzack-Ettinger (MLE) configuration for biological wastewater treatment. The upgrade will also include construction of one additional secondary clarifier as well as facilities for dual-point chemical addition for precipitation of soluble phosphorus and for tertiary effluent flocculation, and filtration using a cloth media filter system and a post aeration system. In addition, the alternative will include replacement of existing mechanical and electrical equipment, instrumentation and control systems that have reached the end of their useful life.
2. **IFAS.** This alternative is essentially the same as Alternative 1, except for the means of upgrading the existing biological wastewater treatment system for nitrogen removal. Instead of using an MLE configuration, this alternative will utilize an integrated fixed-film activated sludge approach that will reduce the additional volume of aeration tanks needed for nitrogen removal. The approach will utilize fixed or floating fixed-film media within the aeration tanks to provide additional biomass necessary for nitrogen removal.
3. **BioMag.** This alternative is the same as Alternative 1, except for the means of upgrading the existing biological wastewater treatment system for nitrogen removal. Instead of using an MLE configuration, this alternative will utilize a high mixed liquor suspended solids approach using a ballast material (magnetite) to assist with settling. This alternative will allow further reduction of the additional volume of aeration tanks needed for nitrogen removal and may reduce, or eliminate, the need for constructing the additional secondary clarifier.

DRAFT

Disinfection Alternatives

The following disinfection alternatives are recommended for further evaluation:

- Chlorination
- UV Disinfection

Post Aeration Alternatives

The following post aeration alternatives are recommended for further evaluation:

- Mechanical Post Aeration

Residuals Management Alternatives

The following residuals management alternatives are recommended for further evaluation:

- Sludge thickening
- Sludge dewatering

This document is in draft form. The contents, including any opinions, conclusions or recommendations contained in, or which may be implied from, this draft document must not be relied upon. GHD reserves the right, at any time, without notice, to modify or retract any part or all of the draft document. To the maximum extent permitted by law, GHD disclaims any responsibility or liability arising from or in connection with this draft document.

Odor Control Alternatives

The following odor control alternatives are recommended for further evaluation:

- Biofilter

Sustainability Alternatives

The following sustainability considerations are recommended for further evaluation:

- Water Conservation
- Energy Efficiency
- Energy Recovery
- Alternative Energy

Flow and Loading Reduction Alternatives

The following flow and loading reduction alternatives are recommended for further evaluation:

- Conduct further investigations on the recommendations of the I/I analysis
- Continue policies encouraging water conservation
- Proceed with Growth Neutral Controls

9.5 Next Steps

The first phase of the Project was the identification of the Town of Uxbridge's wastewater management needs, as documented by the Draft Needs Assessment Report. This Alternatives Screening Analysis Report documents the second phase. The third (and final) phase of the Project will provide a detailed evaluation of the screened alternatives retained for further evaluation. Detailed evaluation will include cost-effectiveness comparisons using present worth evaluation and evaluation of non-monetary factors. The third phase will conclude with the Recommended Wastewater Management Plan.

DRAFT

This document is in draft form. The contents, including any opinions, conclusions or recommendations contained in, or which may be implied from, this draft document must not be relied upon. GHD reserves the right, at any time, without notice, to modify or retract any part or all of the draft document. To the maximum extent permitted by law, GHD disclaims any responsibility or liability arising from or in connection with this draft document.

DRAFT

GHD Inc

1545 Iyannough Road

Hyannis, MA 02601

T: 774-470-1630 F: 774-470-1631 E: hyamail@ghd.com

© GHD Inc 2014

This document is and shall remain the property of GHD. The document may only be used for the purpose of assessing our offer of services and for inclusion in documentation for the engagement of GHD. Unauthorized use of this document in any form whatsoever is prohibited.

G:\86\14914\WP\CWMP\Alternatives Screening Analysis\Uxbridge - Alternatives Screening Analysis Report.docx

This document is in draft form. The contents, including any opinions, conclusions or recommendations contained in, or which may be implied from, this draft document must not be relied upon. GHD reserves the right, at any time, without notice, to modify or retract any part or all of the draft document. To the maximum extent permitted by law, GHD disclaims any responsibility or liability arising from or in connection with this draft document.

www.ghd.com

DRAFT

This document is in draft form. The contents, including any opinions, conclusions or recommendations contained in, or which may be implied from, this draft document must not be relied upon. GHD reserves the right, at any time, without notice, to modify or retract any part or all of the draft document. To the maximum extent permitted by law, GHD disclaims any responsibility or liability arising from or in connection with this draft document.